Position	Qty.	Description	Single Price
	1	**Unilift CC**	Price on request

Note! Product picture may differ from actual product

Product No.: 96280968

Grundfos Unilift CC pumps are single-stage submersible pumps with a low suction ability down to 3 mm water level.
The pumps are designed for pumping rainwater and grey wastewater, e.g. from
• washing machines, baths, sinks, etc. from low-lying parts of buildings up to sewer level
• cellars or buildings prone to flooding
• draining wells
• wells for surface water with inlets from roof gutters, pits, tunnels, etc.
• swimming pools, ponds or fountains.

The pumps are suitable for both stationary and portable use.
They are for automatic operation.
The pumps allow free passage of particles up to ø10 mm.

The motor incorporates automatic overload protection cutting out the motor in case of overload.
When cooled to normal temperature, the motor restarts automatically.

Technical:

Resulting head of the pump:	4.05 m
Maximum particle size:	10 mm

Materials:

Pump housing:	PP 15 GF
Impeller:	PPOm 20 GF

Installation:

Pump outlet:	1.1/4"
Maximum installation depth:	10 m

Liquid:

Liquid temperature range:	0 .. 40 °C
Liquid temp:	20 °C
Density:	998.2 kg/m³

Electrical data:

Mains frequency:	50 Hz
Rated voltage:	1 x 220-240 V
Rated current:	1.8 A
Capacitor size - run:	8 µF/450 V
Enclosure class (IEC 34-5):	68
Insulation class (IEC 85):	F
Length of cable:	10M m

Position	Qty.	Description	Single Price
		Type of cable plug: SCHUKO	
		Others:	
		Net weight: 4.6 kg	
		Gross weight: 5.2 kg	
		Shipping volume: 0.168 m3	

96280968 Unilift CC 7 50 Hz

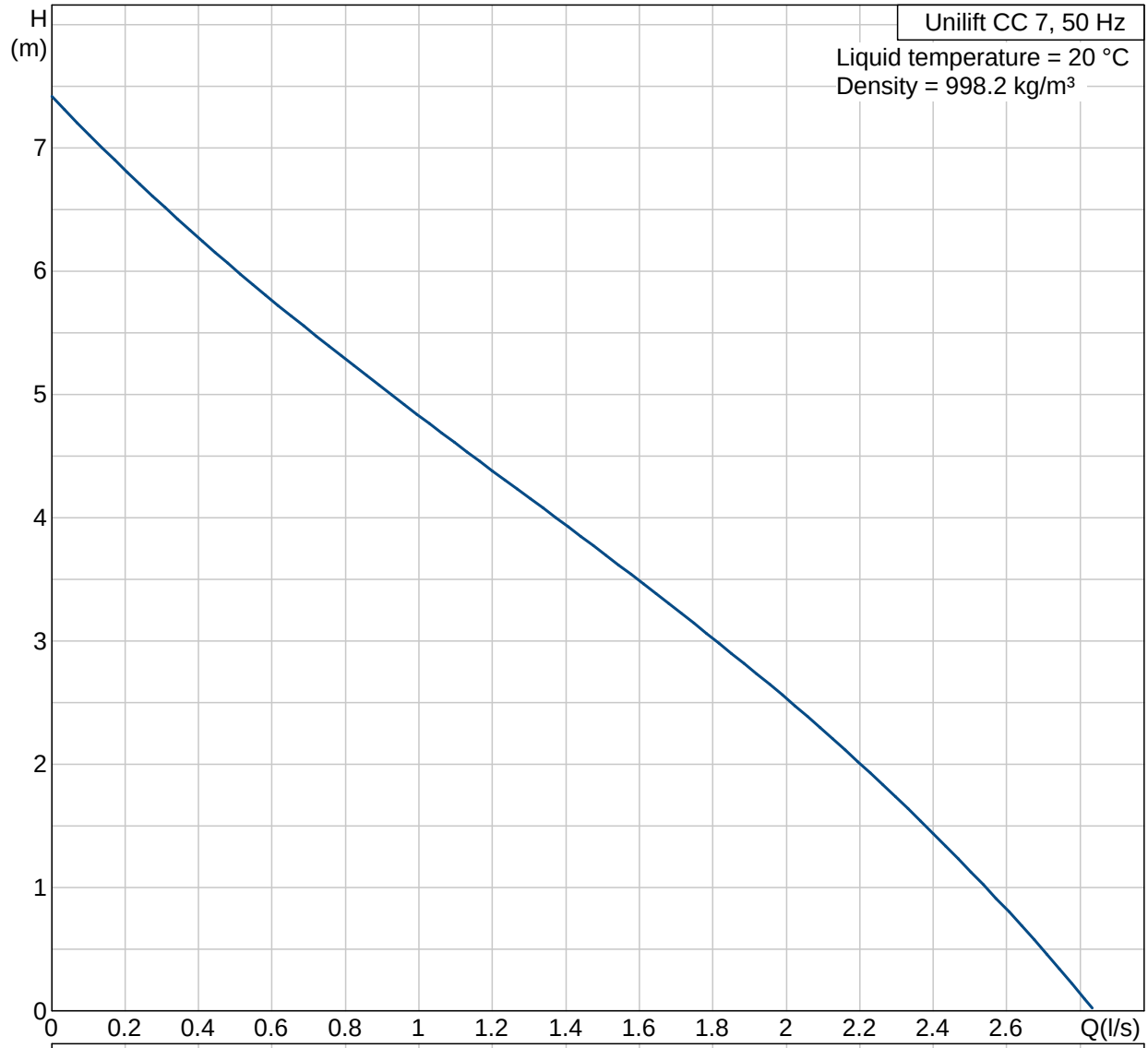

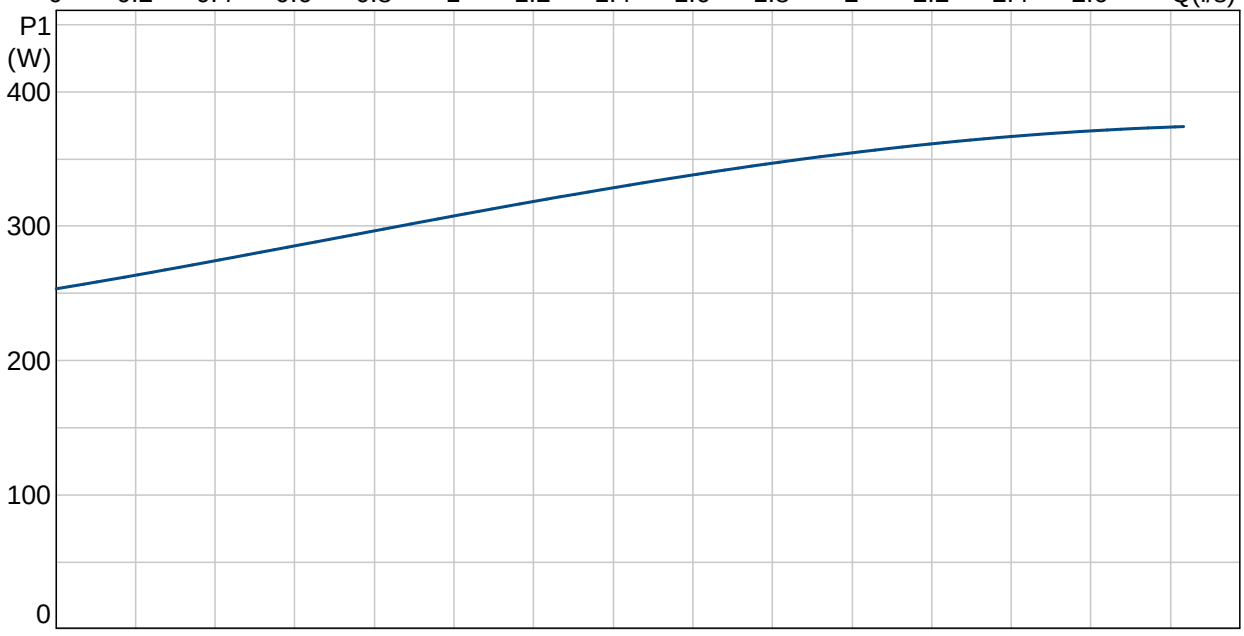

96280968 Unilift CC 7 50 Hz

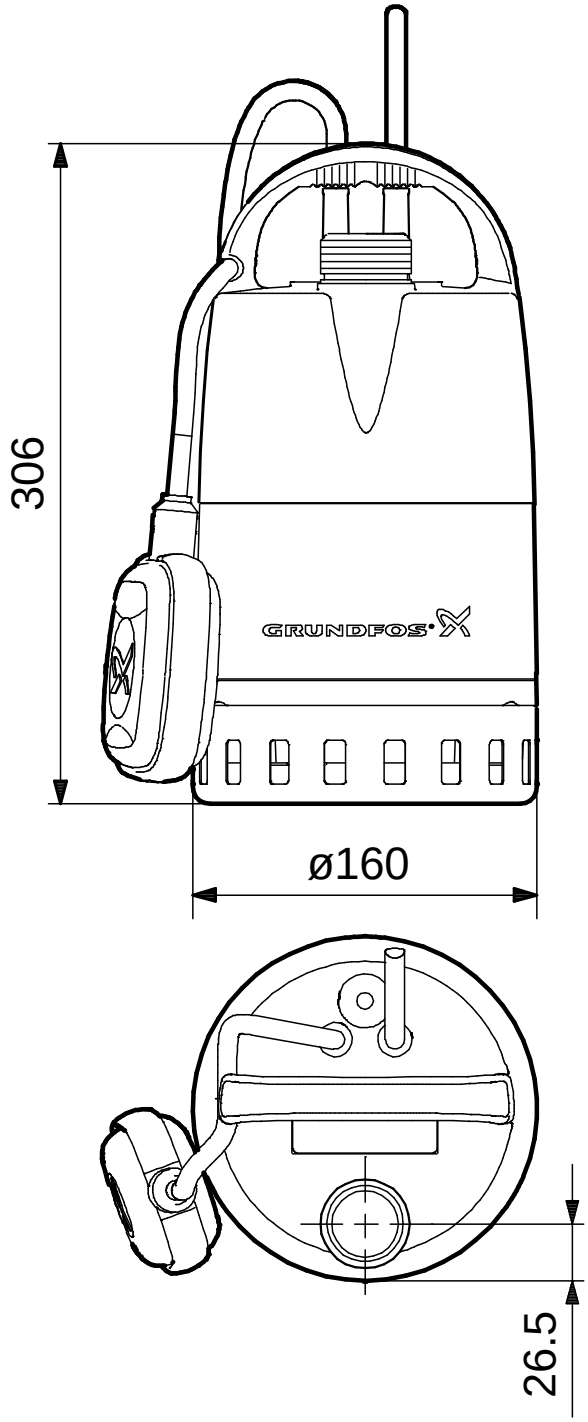

Note! All units are in [mm] unless others are stated.
Disclaimer: This simplified dimensional drawing does not show all details.