Steel that warms

The Steel Panel Radiators

KORAD

Production Program

TÜV NORD ISO 9001 Certificate Reg. No. 04 100 930041

TÜV NORD ISO 14001 Certificate Reg. No. 44 104 060736

CE

EURONORM EN 442

DIN Geprüft

PCT AR80

094

0002646

MARK OF QUALITY SLOVAK GOLD CERTIFICATE N°12/2006

www.usskorad.sk

U. S. STEEL KOŠICE, s.r.o. MANUFACTURER OF STEEL PANEL RADIATORS KORAD

COMPANY

U. S. Steel Company s.r.o. is a subsidiary of the U. S. Steel Corporation based in Pittsburgh, USA. The Corporation is engaged for over one hundred years in production and processing of steel and is one of the world's largest producers.

The U. S. Steel s.r.o. Company is one of the leading producers of flat rolled products in Central Europe. This modern integrated metallurgical enterprise comprises the processes from the primary processing of raw materials through the production of pig iron and steel to outputs of final products with high added values. Its production program consists of a wide range of hot and cold rolled sheets and coated sheets, including hot-dip galvanized sheets, tin plates, color-coated sheets and non-grain oriented steels designed for various industries.

In addition to the steel sheets, the Company also manufactures spirally-welded pipes and steel panel radiators under the KORAD brand.

PRODUCTION QUALITY

The U. S. Steel Company has established and applies the Quality Management System in accordance with EN ISO 9001 and the Environmental Management System according to EN ISO 14001, issued by TÜV NORD Slovakia.

The company also holds several international and domestic product certificates issued for KORAD radiators.

High quality of radiators is also confirmed by repeatedly granted prestigious Slovak Gold Award.

In addition to quality products, the Company provides its customers with comprehensive technical and advisory services in:

- *Research*
- *Technical customer service*
- *Marketing and Trade*

Tradition of providing quality products and services and, above all, trust of partners are the values that the U. S. Steel Company is firmly committed to protect and develop.

INNOVATIONS, TRADITION & QUALITY - PRODUCTION OF KORAD RADIATORS IN U. S. STEEL KOŠICE, s.r.o.

The production of steel radiators has a long-term tradition in our Company dating back to 1968. The Korad panel radiators are manufactured in one of the U. S. Steel Company's production mills equipped with modern lines with a high degree of automation.

The input materials for production of radiators are cold rolled sheets with specific composition. To achieve the highest quality of sheets, the experts are continually monitoring and regulating the chemical and mechanical parameters of materials from the starting materials to the finished products.

The coils made of cold-rolled sheets are unwound again, cut to desired lengths, shapes and welded into desired shapes. Each product passes a pressure test to ensure that the radiator wil be able to properly fulfill its long-term function. In the following section of the line, radiators pass through a series of surface treatments. The last of the treatments is cataforetic application of surface powder paint, after which the product goes to the baking oven. With covers in place, the radiator is ready for packaging.

A special attention is paid to the radiator protection during storage and transport. Each radiator is provided with cardboard package, while edges are protected with plastic triangular profiles. At the end, the radiator is wrapped in a protective plastic foil and placed on wooden pallets to be exported to customers.

The production constantly responds to the requirements of the markets and the global developments by on-going innovations that for years make the KORAD radiators the advanced products of high quality, as evidenced by the fact that this product is successfully sold throughout Europe and is able to withstand the toughest competition of the top European manufacturers.

TÜV NORD ISO 9001 Certificate Reg. No. 04 100 930041 | TÜV NORD ISO 14001 Certificate Reg. No. 44 104 060736 | CE | EN 442 EURONORM | DIN Geprüft | PCT AR80 | 094 | 0002646 | MARK OF QUALITY SLOVAK GOLD CERTIFICATE N° 12/2006

KORAD 10 ROKOV ZÁRUKA

TABLE OF CONTENTS

PRODUCT DESCRIPTION

The KORAD radiators are heaters allowing heat exchange between the heat-carrying medium (water) and the surrounding area.

The radiator body consists of one, two or three panels. The radiator panel itself is welded from two steel cold rolled stamped pieces, by a seam weld around the perimeter and by the resistance spot welds in the vertical ribs. The axis pitch of vertical channels is 33.33 mm.

To increase the heating efficiency, some types of radiators are equipped with one, two or three additional heat-exchanging bent sheets - convectors. The convector is spot-welded to the vertical channels of radiator bodies. Its surface increases the heating capacity of the heating body up to about 30%.

The Ventil-Kompakt (VK) radiators are equipped with additional flow piping enabling bottom connections and a valve insert with adjustable k_V values. The VK radiators are supplied with a connection on the bottom right, left, or center connection (VKS). All types of radiators can be supplied with a flat front panel - KORAD PLAN (-P).

TECHNICAL PARAMETERS

Technical parameters of the KORAD steel panel radiators meet the requirements of EN 442-1:1997/A1:2004. Radiators are certified according to EN 442:1 by the Notified Body No. ES1015, Strojírensky zkusebni ustav, s. p. Brno, the Czech Republic and are CE marked on the basis of the Declaration of Conformity.

The fact that the quality requirements according to EN 442 have been met is confirmed by the radiator performance tests conducted by the renowned HLK Stuttgart accredited laboratory and by the registration in DIN CERTCO in Berlin. The Declaration of Conformity and certificates can be downloaded from the site www.usskorad.sk, or may be sent on request.

TYPE ASSORTMENT

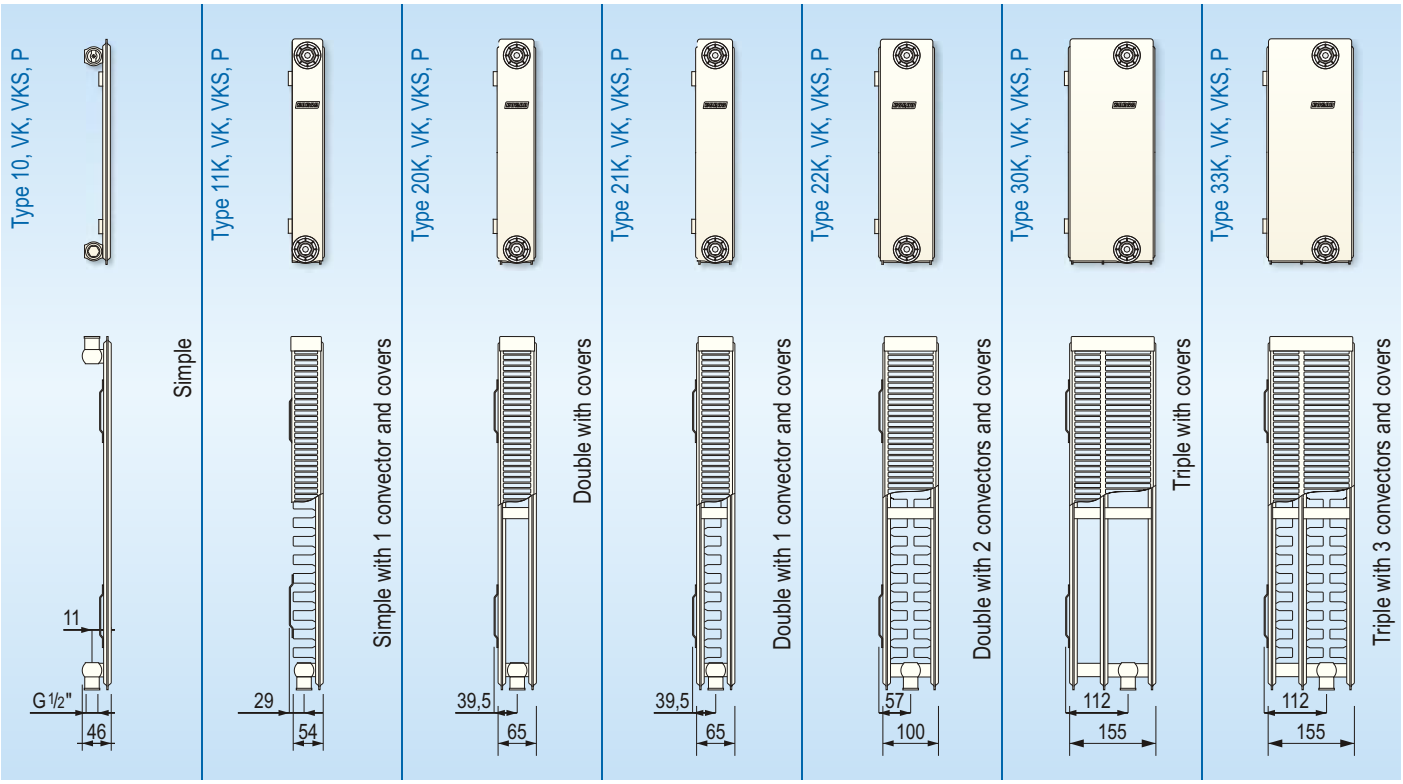

MATERIAL

The KORAD panel radiators and convectors are made of low carbon cold rolled steel sheets produced by U. S. Steel Košice according to STN EN10130 + A1. The steel is characterized by increased tensile strength and good weldability.

SURFACE TREATMENT

- Degreasing
- Phosphate layer
- Cataforetic basic paint
- Top coat - electrostatically applied powder coat - RAL 9010 shade

PRESSURE, TEMPERATURE

Minimum test pressure	1,3 MPa
Maximum operating pressure	1,0 MPa
Maximum temperature of heat-carrying substance	110 °C

Each radiator must pass a leak test.

NUMBER OF PANELS AND CONVECTORS

TYPE	10	11	20	21	22	30	33
Number of panels	1	1	2	2	2	3	3
Number of convectors	0	1	0	1	2	0	3

HEIGHT AND LENGTH RANGE FOR KORAD [mm]

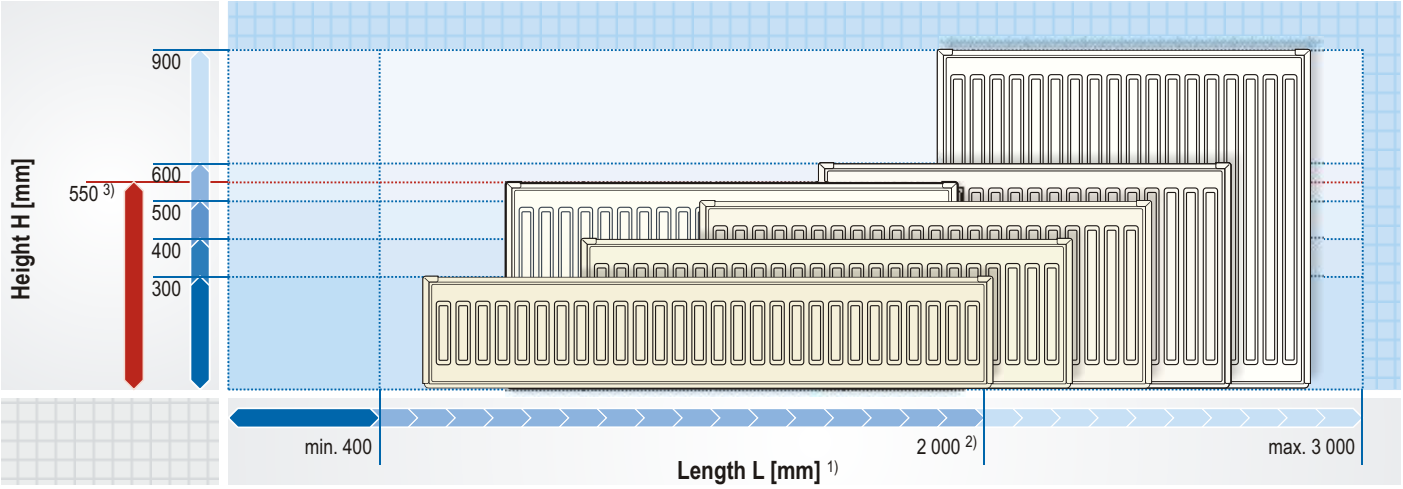

1) Production length of radiators is graded by 100 mm
2) Radiators - type 11 and all VKS and PLAN are produced up to lengths of 2 000 mm.
3) Radiators H - 550 mm re produced only in versions Kompakt and Kompakt PLAN in restricted length range - see pages 18 - 19

CONNECTING THE BODY TO THE SYSTEM - TYPE KOMPAKT

- 4 x internal thread G 1/2"
- connecting spacing = the structural height H - 54

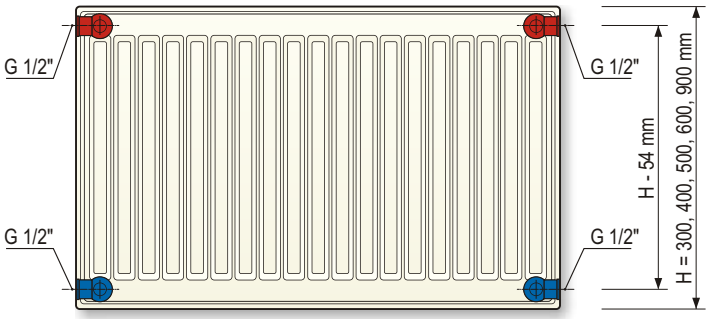

CONNECTING THE BODY TO THE SYSTEM - VENTIL KOMPAKT

- 2 x internal thread for bottom connection G 1/2"
- connecting spacing = 50 mm ± 0.5 mm
- thermostat valve with thread M 30 x 1.5 mm
- 4 x internal threads for side connection G 1/2"
- connecting spacing = overall height H - 54 mm

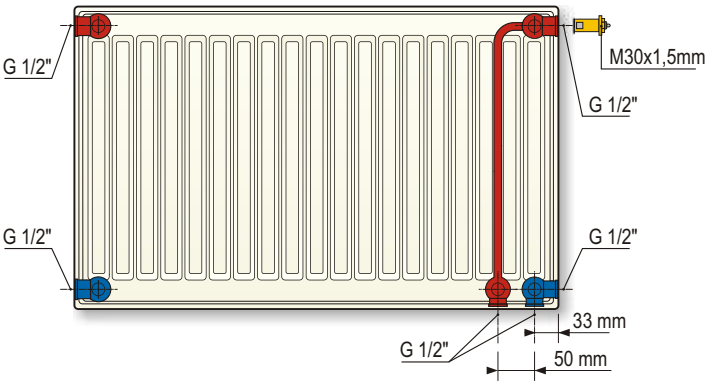

LOCATION

The KORAD panel radiators are suitable for heated spaces with low level of humidity (30-60%) and negligible pollution, for example apartments, offices, schools, hotels, shops, museums and the like. They can be used also in environments with higher relative moisture, but free of condensation and air pollution, such as the sports facilities, warehouses, corridors, but with sufficient and regular ventilation or a permanent operation of the radiators.

The panel radiators should be optimally placed at least 140 mm below the window sill and 70 mm over the floor in the vertical axis of the window. The distance from the wall is usually determined by brackets, but should not be less than 30 mm. The air must freely circulate around the surface of radiators. The maximal recommended slope of the radiator is 45° (attics). Failure to meet these distances may cause a decline of the heat output.

The bodies should be positioned so as to be out of reach of water from showers, sinks, etc. In areas with the increased hygiene requirements (health care facilities), we recommend radiators without additional heat transferring surfaces (convectors).

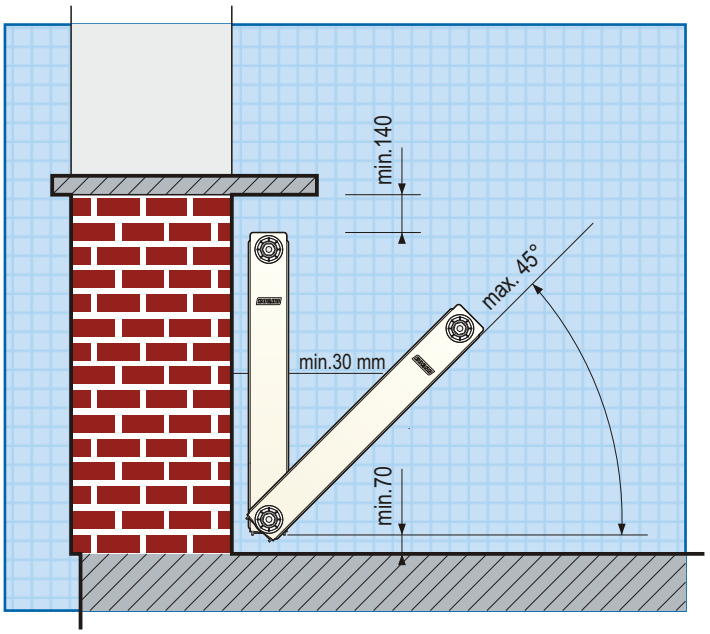

INSTALLATION OF KORAD KOMPAKT RADIATOR WITH THE KORAD MOUNTING BRACKET

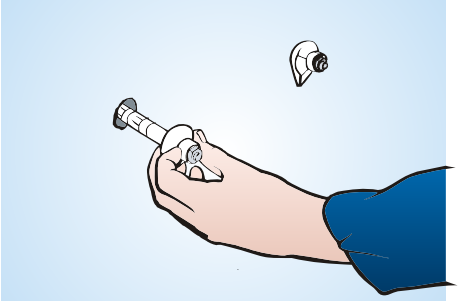

Drill the holes in the wall and insert the Korad brackets (the Korad bracket is shown on the Fig. 11)

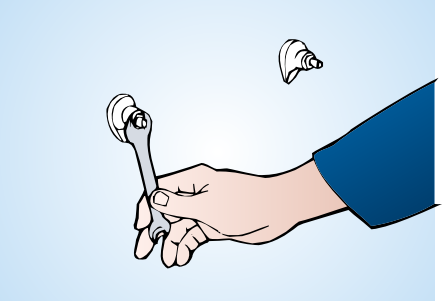

Fix holders carefully by tightening a nut

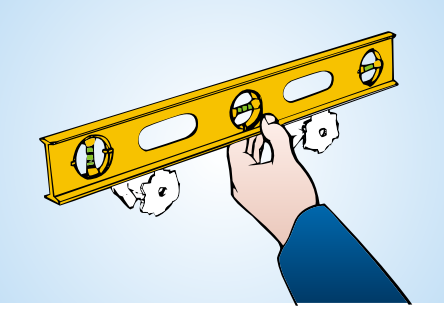

Check the height leveling of bracket adjustment

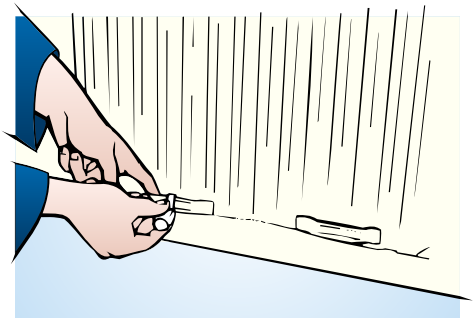

Remove polystyrene covers of holders, mount brackets on the lower hoder of the radiator.

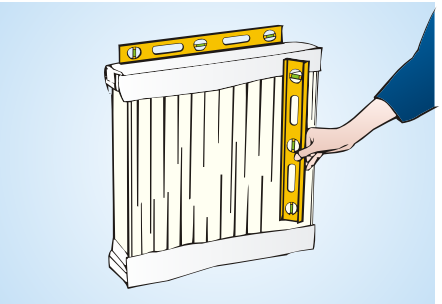

Hang the radiator on brackets and check the horizontal and vertical levelling

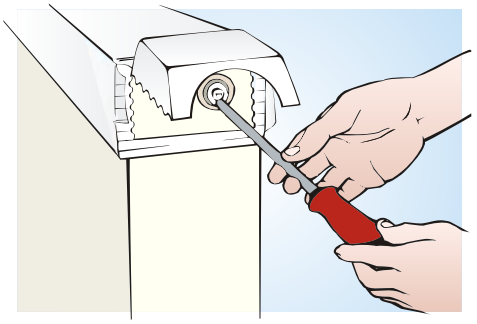

Remove transportation plastic plugs.

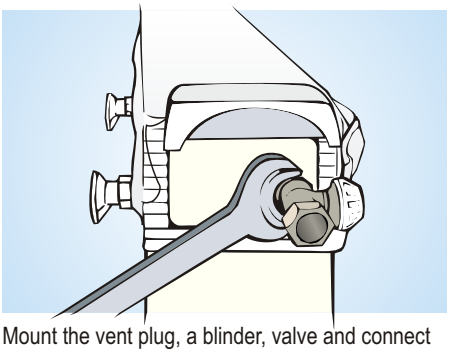

Mount the vent plug, a blinder, valve and connect to the heating circuit.

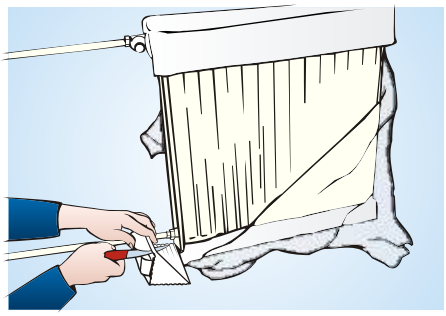

After completion of construction works, remove foils, cardboards and plastic edges

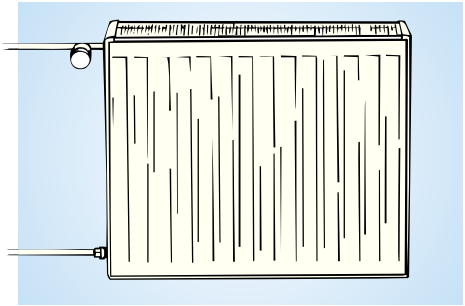

Properly installed radiator.

ASSEMBLY INSTRUCTIONS

- We recommend installing the radiators fully wrapped, thus ensuring maximum protection of the radiators until completion of all construction works. Mounting components allow such installation with minimal intrusion of package in places of hanging brackets, supports and connection to the heating circuit.
- Before installing, cut out a protective foil slightly in place of hanging brackets and plastic protective edges. Protective edges are designed so that they may be folded up at the place of radiator connection.
- Remove the plastic blinders. Never use plastic plugs when operating radiator!
- Install the necessary valves, blinders and a vent plug.
- Radiators must be installed in a slope of 10 to 20 mm per 1 meter of length to have the vent plug located on the top spot.
- The instructions to installation and use are enclosed in each radiator under the protective PE plastic foil

Note: technical changes are reserved

WARNING

Before activating the system check tightening of plugs on fittings!

PACKAGING

Each radiator is wrapped in the PE foil. The edges of the radiators are protected by U-shaped cardboard; the corners are protected by a plastic angle. During transport and storage, the radiators are placed on non-returnable wooden pallets in accordance with the Pallet Arrangement Plan.

CLEANING AND MAINTENANCE

Use appropriate detergents for cleaning painted surfaces. Never use abrasive cleaners or agents containing chlorine or acids.

WARRANTY

If using the product for its intended purpose and in compliance with the terms of the warranty enclosed to the radiator, then the 10-year warranty applies.

CONNECTING THE RADIATORS TO THE HEATING SYSTEM

According to the method of connection to the heating system, the KORAD radiators are broken down in terms of their design to the Korad Kompakt (K) type and Korad Ventil Kompakt (VK) type.

The KORAD Kompakt radiators are designed for side connections to the heating system with gravity or forced circulation.

The Ventil Kompakt radiators are designed primarily for lower connection to the system with forced circulation, but they also allow the unilateral lateral connection similar to Korad Kompakt type.

VALVE INSERT

The KORAD Ventil-Kompakt radiator is supplied with a valve Heimeier - type 4360, which is built in the radiator fittings and serves as hydraulic setup regulation .

The valve insert is equipped with a plastic cover protecting it from damage during transportation and installation of the heater and also allows the manual adjustment

A thermosta can be mounted directly to the KORAD Ventil-Kompakt radiator, which allows controlling the room temperature. The connecting thread for the thermostatic head is M 30 x 1.5 mm

CONNECTING THE KORAD KOMPAKT RADIATORS

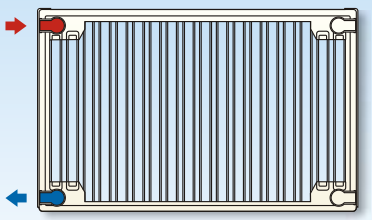

One-sided connection
φ = 1

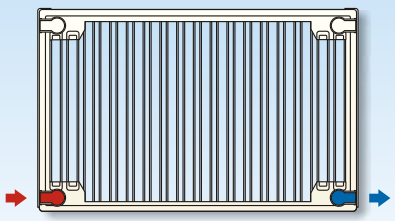

Both-sided bottom connection
φ = 0,9

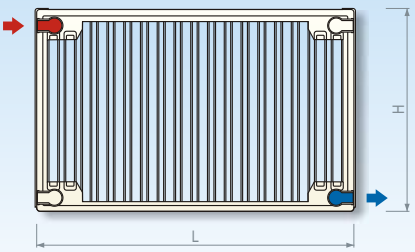

Cross connection
φ = 1 recommended at: L ≥ 3 x H

CONNECTING THE KORAD VKL, VKS, VKP RADIATORS — SINGLE-PIPE SYSTEM

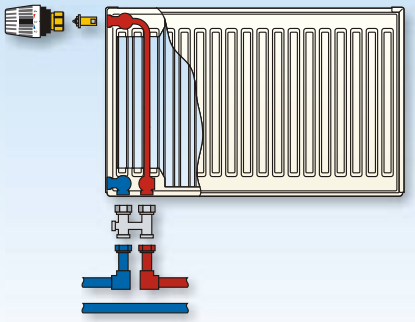

Left connection

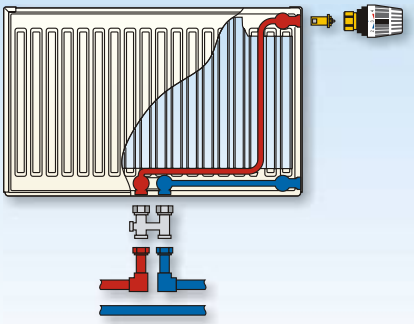

Central connection

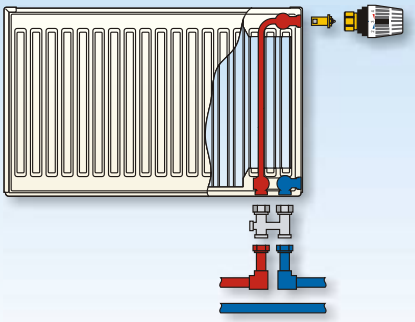

Right connection

CONNECTING THE KORAD VKL, VKS, VKP RADIATORS — DOUBLE-PIPE SYSTEM

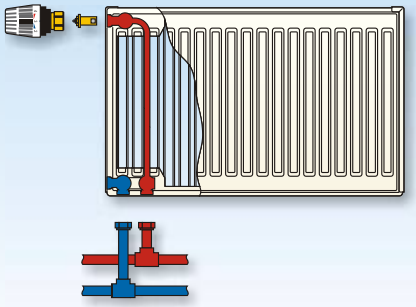

Left connection

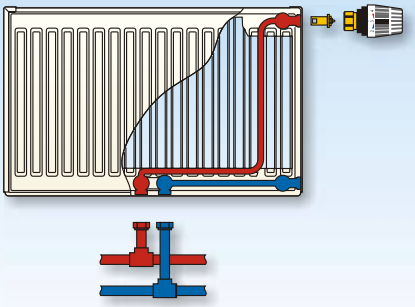

Central connection

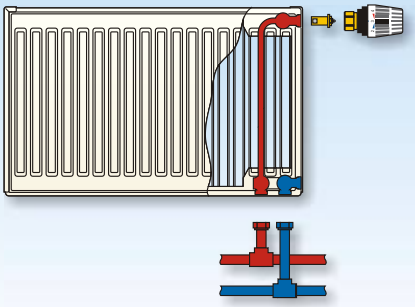

Right connection

RECOMMENDED THERMOSTATS

Manufacturer	Type of thermostat
Heimeier	all types
Comap	IF 1
Danfoss	RAWK
Drayton	TRV 4
Gampper	340012.100
Herz	Porsche design „H“,Mini „H“, Termostat „H“

Manufacturer	Type of thermostat
Honeywell	Brauckmann T 100 - 361
Oventrop	Uni LH
MNG	thera 2 / thera 3
Rossweiner	Star Tec
Ivar	typ 3000, typ 5000
Siemens	RTN 51

EQUATION FOR PRESSURE LOSS CALCULATION

For heat-carrying medium: water

$$\Delta p = \frac{M_w^2}{A_T^2 \cdot \rho_w \cdot 1{,}296} \cdot 10^{-10} = \left[\frac{\dot{V}}{A_T}\right]^2 \cdot \rho_w \cdot 10^{-3} = \xi_T \cdot \frac{w^2}{2} \cdot \rho_w \cdot 10^{-3}\ [\mathrm{kPa}]$$

FLOW CHARACTERISTICS OF KORAD KOMPAKT RADIATORS

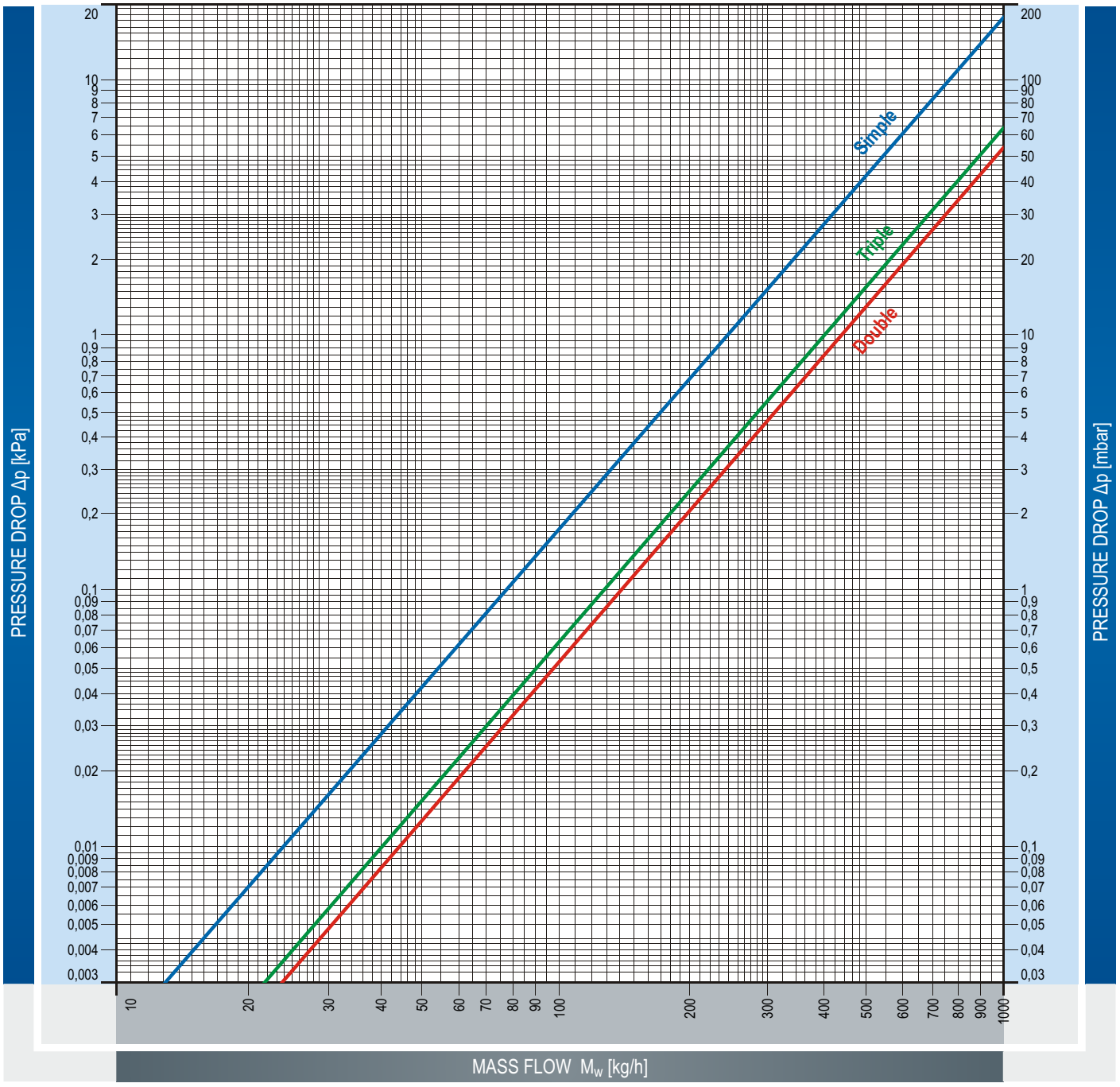

FLOW PARAMETERS FOR KOMPAKT TYPE

Type of radiator	Variable	For dimension of internal connecting thread = G 1/2"
Simple 10,11	A_T [m^2]	$6{,}64 \cdot 10^{-5}$
	ξ_T [-]	18,4
Double 20, 21, 22	A_T [m^2]	$1{,}2 \cdot 10^{-4}$
	ξ_T [-]	5,62
Triple 30, 33	A_T [m^2]	$1{,}10 \cdot 10^{-4}$
	ξ_T [-]	6,7

USED SYMBOLS

M_w	[kg/h]	mass flow
Δp	[kPa]	pressure drop
$\dot{V}$	[m^3.s^{-1}]	volume flow
A_T	[m^2]	flow coefficient
ρ_w	[kg.m^{-3}]	The density of heat-carrying medium
ξ_T	[-]	resistance coefficient
w	[m.s^{-1}]	velocity of heating medium related to the inner diameter of connected pipes

EQUATION FOR MASS FLOW CALCULATION

$$M_w = \frac{\Phi}{C \cdot \Delta t} \quad [kg \cdot h^{-1}]$$

SYMBOLS USED

M_w	[kg . h^{-1}]	mass flow
Φ	[W]	heat output
Δt	[K]	water temperature decrease
Δp	[kPa]	pressure drop
C	[m^2. s^{-2}. K^{-1}]	specific heat of water = 4 186
k_v	[m^3. h^{-3}]	density of heat-carrying medium

DIAGRAM Δp - M_w - k_v

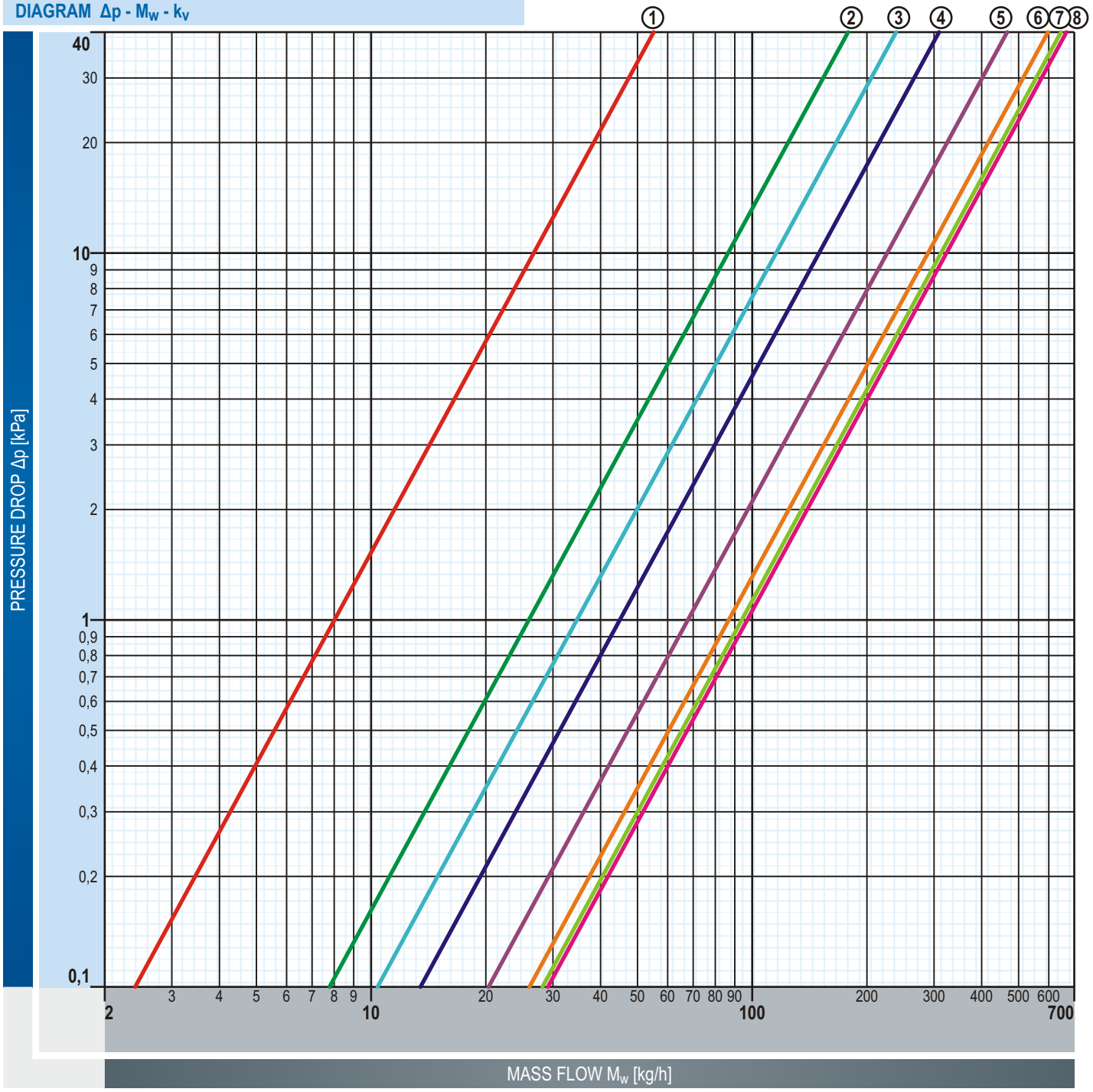

SETTING THE VALVE INSERT FLOW RATE

valve pre-setting	①	②	③	④	⑤	⑥	⑦	⑧	max. temp. of heat-carrying medium	110 °C
value k_v [m^3/h]	0,089	0,288	0,385	0,499	0,753	0,964	1,044	1,084	max. operating pressure	1 MPa

The Korad VK radiators are supplied with the Heimeier valve of the 4360 type, which allows fine - tune setting

Example of valve setting calculation is on the page 26

TYPES

10, 10VK,10VKS
20K, 20VK, 20VKS
21K, 21VK, 21VKS
22K, 22VK, 22VKS
33K, 33VK, 33VKS
and type PLAN

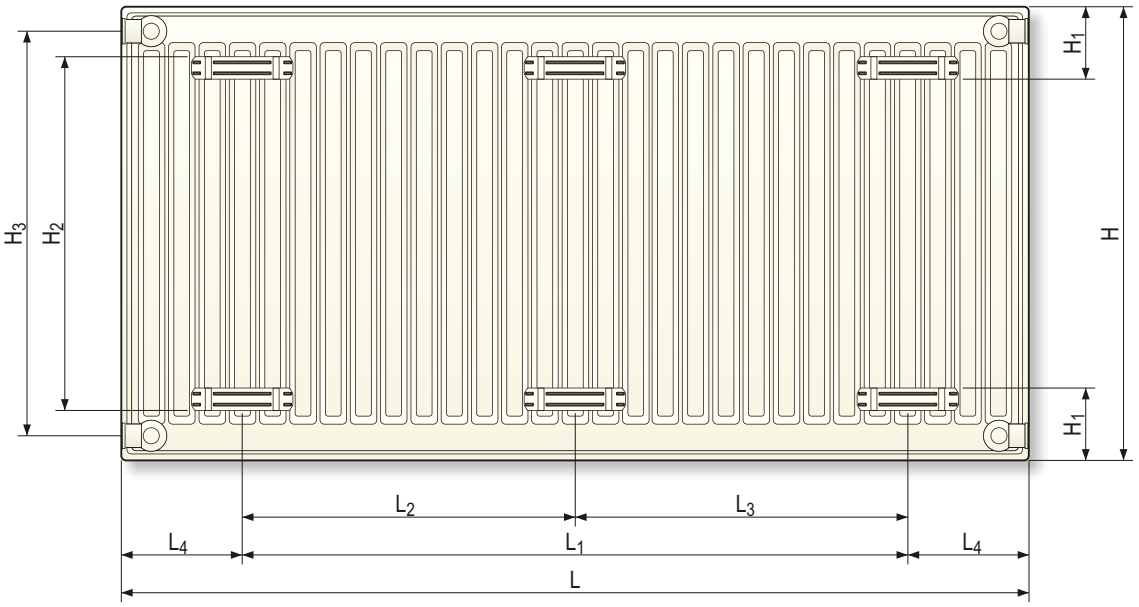

DISTRIBUTION OF HANG TABS — **vertical dimensions**

Length L* [mm]	Number of tabs	L_1 [mm]	L_2 [mm]	L_3 [mm]	L_4 [mm]
400	4	L - 200	-	-	100
500, 600, 700, 800, 900, 1 000, 1 100, 1 200, 1 300, 1 400, 1 500, 1 600	4	L - 266	-	-	133
1 700, 1 900, 2 100, 2 300, 2 500, 2 700, 2 900	6	L - 266	$L_1/2+16,5$	$L_1/2-16,5$	133
1 800, 2 000, 2 200, 2 400, 2 600, 2 800, 3 000	6	L - 266	$L_1/2$	$L_1/2$	133

* Radiators with flat front panel (PLAN) are produced up to the length of 2 000 mm maximum.

horizontal dimensions

Height H [mm]	H_1 [mm]	H_2 [mm]	H_3 [mm]
300 400 500 600 900	90	H - 130	H - 54

TYPE

11K, 11VK,11VKS
and type PLAN

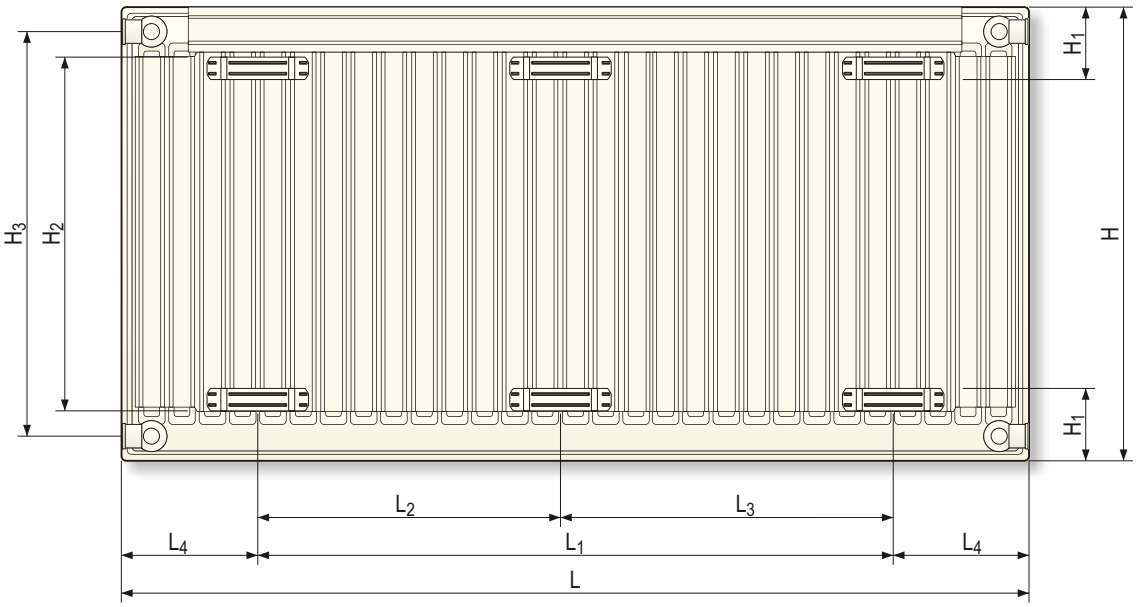

DISTRIBUTION OF HANG TABS — **vertical dimensions**

Length L [mm]	Number of tabs	L_1 [mm]	L_2 [mm]	L_3 [mm]	L_4 [mm]
400	4	L - 234	-	-	117
500, 600, 700, 800, 900, 1 000, 1 100, 1 200, 1 300, 1 400, 1 500, 1 600	4	L - 300	-	-	150
1 700, 1 900	6	L - 300	$L_1/2-16,5$	$L_1/2+16,5$	150
1 800, 2 000	6	L - 300	$L_1/2$	$L_1/2$	150

horizontal dimensions

Height H [mm]	H_1 [mm]	H_2 [mm]	H_3 [mm]
300 400 500 600 900	90	H - 130	H - 54

ASSEMBLY COMPONENTS

To install the radiators, we offer several types of mounting brackets and supports used depending on the construction material of the wall. The KORAD bracket, which is most commonly used type of a mounting bracket, is suitable for full building materials, but not for walls made of perforated bricks! In plaster or glazed walls we suggest the floor brackets.

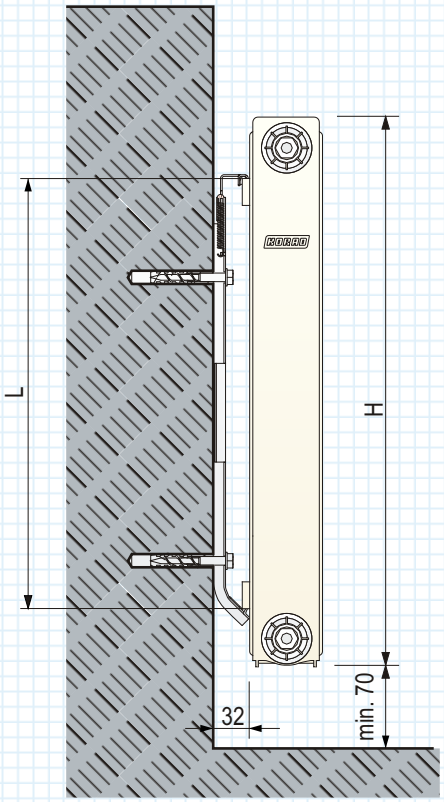

	H	L
H300	300	190
H400	400	290
H500	500	390
H600	600	490
H900	900	790

Bracket LK 101

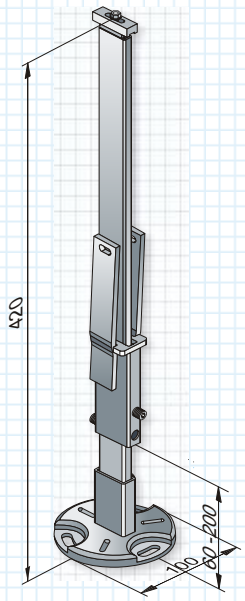

Stand bracket

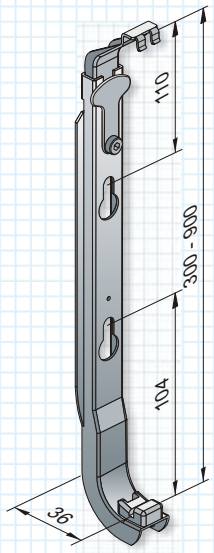

Wall bracket

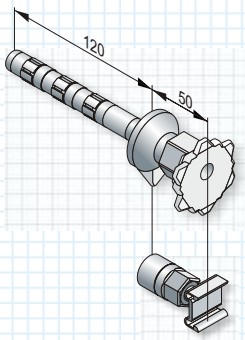

Wall drill-in bracket Korad

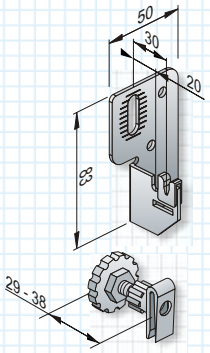

Angle bracket

CONNECTION FITTINGS

Accessories for panel radiators, i.e. vent caps and plugs, and mounting parts (brackets and restraint) are supplied by the manufacturer of panel radiators by a specific order.

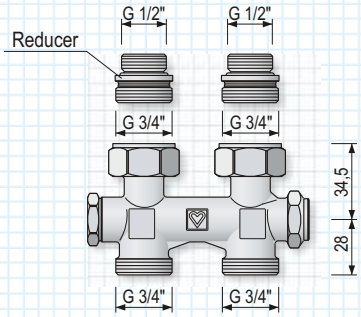

Direct bypass with presetting

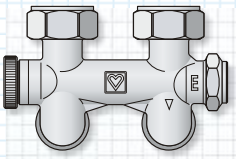

Corner bypass with presetting

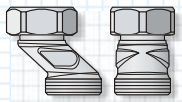

Compensatory holder

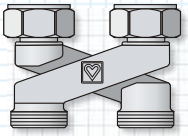

Cross piece in the “x” form

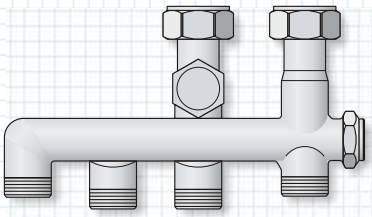

Double-circuit distributor

Note: the above brackets and fittings are not included with delivered radiators!

RADIATOR TYPES

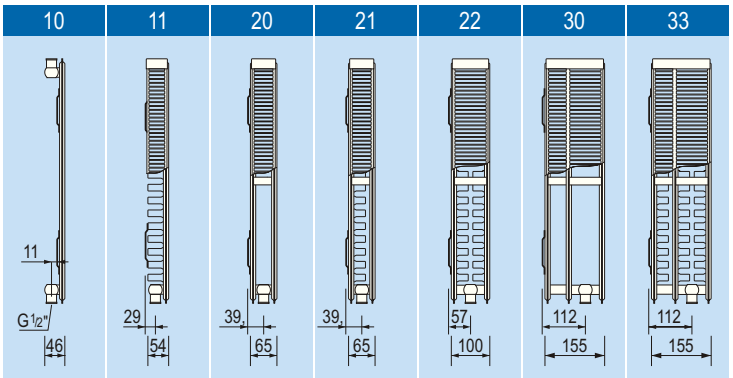

BASIC TECHNICAL DATA

	Type of radiator						
	10	11	20	21	22	30	33
M_T^K [kg.m^{-1}]	6,75	10,60	14,06	14,97	17,13	21,60	25,31
M_T^{VK} [kg.m^{-1}]	6,96	10,81	14,25	15,16	17,33	21,79	25,50
V_T [dm^3.m^{-1}]	1,81	1,81	3,50	3,50	3,50	5,20	5,20
n [-]	1,3187	1,2912	1,3128	1,3239	1,3087	1,2831	1,3005

H - radiator height
M_T^K - Kompakt radiator body weight
M_T^{VK} - Ventil Kompakt radiator body weight
V_T - water volume of radiator body
n - temperature exponent

TYPE 10 K, VK, VKS

t_1 / t_2 [°C]	90 / 70			75 / 65			70 / 55			55 / 45		
t_r [°C]	15	20	22	15	20	22	15	20	22	15	20	22
Length [mm]												
400	193	174	166	155	137	130	128	110	102	85	70	63
500	242	217	208	194	171	162	160	138	128	107	87	79
600	290	261	250	233	205	194	192	166	154	128	105	95
700	338	304	291	271	239	227	224	193	179	150	122	110
800	387	348	333	310	274	259	256	221	205	171	139	126
900	435	391	374	349	308	292	288	248	231	192	157	142
1 000	483	435	416	388	342	324	320	276	256	214	174	158
1 100	532	478	458	427	376	356	352	304	282	235	192	173
1 200	580	522	499	465	410	389	384	331	307	256	209	189
1 300	628	565	541	504	445	421	416	359	333	278	227	205
1 400	677	609	582	543	479	454	447	386	359	299	244	221
1 500	725	652	624	582	513	486	479	414	384	321	262	236
1 600	773	696	665	620	547	519	511	442	410	342	279	252
1 700	822	739	707	659	581	551	543	469	436	363	296	268
1 800	870	783	749	698	616	583	575	497	461	385	314	284
1 900	918	826	790	737	650	616	607	524	487	406	331	300
2 000	967	870	832	776	684	648	639	552	512	427	349	315
2 100	1 015	913	873	814	718	681	671	580	538	449	366	331
2 200	1 063	957	915	853	752	713	703	607	564	470	384	347
2 300	1 112	1 000	957	892	787	745	735	635	589	491	401	363
2 400	1 160	1 044	998	931	821	778	767	662	615	513	418	378
2 500	1 208	1 087	1 040	970	855	810	799	690	641	534	436	394
2 600	1 257	1 131	1 081	1 008	889	843	831	718	666	556	453	410
2 700	1 305	1 174	1 123	1 047	923	875	863	745	692	577	471	426
2 800	1 353	1 218	1 165	1 086	958	907	895	773	717	598	488	441
2 900	1 402	1 261	1 206	1 125	992	940	927	800	743	620	506	457
3 000	1 450	1 305	1 248	1 163	1 026	972	959	828	769	641	523	473

TYPE 11 K, VK, VKS

t_1 / t_2 [°C]	90 / 70			75 / 65			70 / 55			55 / 45		
t_r [°C]	15	20	22	15	20	22	15	20	22	15	20	22
Length [mm]												
400	306	276	264	247	218	207	204	177	164	138	113	102
500	382	345	330	308	273	259	255	221	205	172	141	128
600	459	414	396	370	327	310	306	265	246	206	169	153
700	535	483	462	431	382	362	357	309	288	241	197	179
800	612	552	528	493	436	414	408	353	329	275	225	204
900	688	621	594	555	491	465	459	398	370	309	254	230
1 000	765	690	660	616	545	517	510	442	411	344	282	255
1 100	841	759	726	678	600	569	561	486	452	378	310	281
1 200	918	828	792	740	654	620	612	530	493	413	338	306
1 300	994	897	858	801	709	672	663	574	534	447	366	332
1 400	1 071	966	924	863	763	724	714	619	575	481	395	357
1 500	1 147	1 034	990	925	818	776	765	663	616	516	423	383
1 600	1 224	1 103	1 056	986	872	827	816	707	657	550	451	409
1 700	1 300	1 172	1 122	1 048	927	879	867	751	698	585	479	434
1 800	1 377	1 241	1 188	1 109	981	931	918	795	739	619	507	460
1 900	1 453	1 310	1 254	1 171	1 036	982	969	839	780	653	535	485
2 000	1 530	1 379	1 320	1 233	1 090	1 034	1 020	884	822	688	564	511
2 100												
2 200												
2 300												
2 400												
2 500												
2 600												
2 700												
2 800												
2 900												
3 000												

TYPE 20 K, VK, VKS

t_1 / t_2 [°C]	90 / 70			75 / 65			70 / 55			55 / 45		
t_r [°C]	15	20	22	15	20	22	15	20	22	15	20	22
Length [mm]												
400	328	296	283	265	234	222	219	190	176	148	121	110
500	411	370	354	331	293	277	274	237	220	184	151	137
600	493	444	425	397	351	333	328	284	264	221	181	164
700	575	518	496	463	410	388	383	332	309	258	212	192
800	657	592	567	529	468	444	438	379	353	295	242	219
900	739	666	638	596	527	499	493	427	397	332	272	246
1 000	821	740	709	662	585	555	547	474	441	369	302	274
1 100	903	814	780	728	644	610	602	522	485	406	333	301
1 200	985	889	850	794	702	666	657	569	529	443	363	329
1 300	1 068	963	921	860	761	721	712	616	573	480	393	356
1 400	1 150	1 037	992	926	819	777	766	664	617	517	423	383
1 500	1 232	1 111	1 063	993	878	832	821	711	661	553	453	411
1 600	1 314	1 185	1 134	1 059	936	888	876	759	705	590	484	438
1 700	1 396	1 259	1 205	1 125	995	943	931	806	749	627	514	466
1 800	1 478	1 333	1 276	1 191	1 053	999	985	853	793	664	544	493
1 900	1 560	1 407	1 347	1 257	1 112	1 054	1 040	901	838	701	574	520
2 000	1 642	1 481	1 417	1 323	1 170	1 110	1 095	948	882	738	605	548
2 100	1 724	1 555	1 488	1 390	1 229	1 165	1 150	996	926	775	635	575
2 200	1 807	1 629	1 559	1 456	1 287	1 221	1 204	1 043	970	812	665	602
2 300	1 889	1 703	1 630	1 522	1 346	1 276	1 259	1 091	1 014	849	695	630
2 400	1 971	1 777	1 701	1 588	1 404	1 332	1 314	1 138	1 058	885	725	657
2 500	2 053	1 851	1 772	1 654	1 463	1 387	1 369	1 185	1 102	922	756	685
2 600	2 135	1 925	1 843	1 720	1 521	1 443	1 423	1 233	1 146	959	786	712
2 700	2 217	1 999	1 914	1 787	1 580	1 498	1 478	1 280	1 190	996	816	739
2 800	2 299	2 073	1 984	1 853	1 638	1 554	1 533	1 328	1 234	1 033	846	767
2 900	2 381	2 147	2 055	1 919	1 697	1 609	1 588	1 375	1 278	1 070	877	794
3 000	2 463	2 221	2 126	1 985	1 755	1 665	1 642	1 422	1 322	1 107	907	822

TYPE 21 K, VK, VKS

Length [mm]	t_1 / t_2 [°C]	90 / 70			75 / 65			70 / 55			55 / 45		
	t_r [°C]	15	20	22	15	20	22	15	20	22	15	20	22
	400	426	383	366	341	301	285	281	243	225	188	153	138
	500	532	479	458	427	376	356	351	303	281	234	191	173
	600	639	574	549	512	451	427	422	364	338	281	229	207
	700	745	670	641	597	526	499	492	424	394	328	268	242
	800	851	766	732	683	602	570	562	485	450	375	306	276
	900	958	862	824	768	677	641	632	546	506	422	344	311
	1 000	1 064	957	915	853	752	712	703	606	563	469	382	346
	1 100	1 171	1 053	1 007	938	827	784	773	667	619	516	421	380
	1 200	1 277	1 149	1 098	1 024	902	855	843	728	675	563	459	415
	1 300	1 384	1 244	1 190	1 109	978	926	913	788	732	610	497	449
	1 400	1 490	1 340	1 281	1 194	1 053	997	984	849	788	657	535	484
	1 500	1 596	1 436	1 373	1 280	1 128	1 069	1 054	910	844	703	574	518
	1 600	1 703	1 532	1 464	1 365	1 203	1 140	1 124	970	900	750	612	553
	1 700	1 809	1 627	1 556	1 450	1 278	1 211	1 194	1 031	957	797	650	588
	1 800	1 916	1 723	1 648	1 536	1 354	1 282	1 265	1 092	1 013	844	688	622
	1 900	2 022	1 819	1 739	1 621	1 429	1 354	1 335	1 152	1 069	891	727	657
	2 000	2 129	1 915	1 831	1 706	1 504	1 425	1 405	1 213	1 125	938	765	691
	2 100	2 235	2 010	1 922	1 792	1 579	1 496	1 476	1 273	1 182	985	803	726
	2 200	2 341	2 106	2 014	1 877	1 654	1 567	1 546	1 334	1 238	1 032	841	760
	2 300	2 448	2 202	2 105	1 962	1 730	1 639	1 616	1 395	1 294	1 079	880	795
	2 400	2 554	2 298	2 197	2 048	1 805	1 710	1 686	1 455	1 351	1 126	918	829
	2 500	2 661	2 393	2 288	2 133	1 880	1 781	1 757	1 516	1 407	1 172	956	864
	2 600	2 767	2 489	2 380	2 218	1 955	1 852	1 827	1 577	1 463	1 219	994	899
	2 700	2 874	2 585	2 471	2 303	2 030	1 924	1 897	1 637	1 519	1 266	1 032	933
	2 800	2 980	2 680	2 563	2 389	2 106	1 995	1 967	1 698	1 576	1 313	1 071	968
	2 900	3 086	2 776	2 654	2 474	2 181	2 066	2 038	1 759	1 632	1 360	1 109	1 002
	3 000	3 193	2 872	2 746	2 559	2 256	2 137	2 108	1 819	1 688	1 407	1 147	1 037

TYPE 22 K, VK, VKS

Length [mm]	t_1 / t_2 [°C]	90 / 70			75 / 65			70 / 55			55 / 45		
	t_r [°C]	15	20	22	15	20	22	15	20	22	15	20	22
	400	554	499	477	445	393	373	368	318	295	247	202	182
	500	693	624	597	557	492	466	460	397	369	308	252	228
	600	831	749	716	668	590	559	552	477	443	370	302	273
	700	970	874	836	780	688	652	643	556	517	431	353	319
	800	1 109	998	955	891	786	745	735	636	590	493	403	365
	900	1 247	1 123	1 074	1 002	885	839	827	715	664	555	453	410
	1 000	1 386	1 248	1 194	1 114	983	932	919	795	738	616	504	456
	1 100	1 524	1 373	1 313	1 225	1 081	1 025	1 011	874	812	678	554	501
	1 200	1 663	1 497	1 432	1 336	1 180	1 118	1 103	954	886	740	605	547
	1 300	1 801	1 622	1 552	1 448	1 278	1 211	1 195	1 033	959	801	655	593
	1 400	1 940	1 747	1 671	1 559	1 376	1 305	1 287	1 113	1 033	863	705	638
	1 500	2 079	1 872	1 791	1 670	1 475	1 398	1 379	1 192	1 107	925	756	684
	1 600	2 217	1 997	1 910	1 782	1 573	1 491	1 471	1 271	1 181	986	806	729
	1 700	2 356	2 121	2 029	1 893	1 671	1 584	1 563	1 351	1 255	1 048	856	775
	1 800	2 494	2 246	2 149	2 004	1 769	1 677	1 655	1 430	1 329	1 109	907	820
	1 900	2 633	2 371	2 268	2 116	1 868	1 771	1 746	1 510	1 402	1 171	957	866
	2 000	2 771	2 496	2 387	2 227	1 966	1 864	1 838	1 589	1 476	1 233	1 008	912
	2 100	2 910	2 621	2 507	2 339	2 064	1 957	1 930	1 669	1 550	1 294	1 058	957
	2 200	3 049	2 745	2 626	2 450	2 163	2 050	2 022	1 748	1 624	1 356	1 108	1 003
	2 300	3 187	2 870	2 746	2 561	2 261	2 143	2 114	1 828	1 698	1 418	1 159	1 048
	2 400	3 326	2 995	2 865	2 673	2 359	2 236	2 206	1 907	1 771	1 479	1 209	1 094
	2 500	3 464	3 120	2 984	2 784	2 458	2 330	2 298	1 987	1 845	1 541	1 259	1 140
	2 600	3 603	3 245	3 104	2 895	2 556	2 423	2 390	2 066	1 919	1 603	1 310	1 185
	2 700	3 741	3 369	3 223	3 007	2 654	2 516	2 482	2 146	1 993	1 664	1 360	1 231
	2 800	3 880	3 494	3 342	3 118	2 752	2 609	2 574	2 225	2 067	1 726	1 411	1 276
	2 900	4 019	3 619	3 462	3 229	2 851	2 702	2 666	2 305	2 140	1 787	1 461	1 322
	3 000	4 157	3 744	3 581	3 341	2 949	2 796	2 758	2 384	2 214	1 849	1 511	1 367

TYPE 30 K, VK, VKS

Length [mm]	t_1 / t_2 [°C]	90 / 70			75 / 65			70 / 55			55 / 45		
	t_r [°C]	15	20	22	15	20	22	15	20	22	15	20	22
	400	464	418	401	374	331	314	310	269	250	210	172	156
	500	580	523	501	468	414	393	388	336	313	262	215	195
	600	696	628	601	561	497	471	465	403	375	314	258	234
	700	812	732	701	655	580	550	543	471	438	367	301	273
	800	928	837	801	749	662	629	620	538	500	419	344	312
	900	1 043	942	902	842	745	707	698	605	563	472	387	351
	1 000	1 159	1 046	1 002	936	828	786	775	672	625	524	430	390
	1 100	1 275	1 151	1 102	1 029	911	864	853	739	688	576	473	429
	1 200	1 391	1 255	1 202	1 123	994	943	930	807	750	629	516	468
	1 300	1 507	1 360	1 302	1 216	1 076	1 021	1 008	874	813	681	559	507
	1 400	1 623	1 465	1 402	1 310	1 159	1 100	1 085	941	875	734	602	546
	1 500	1 739	1 569	1 503	1 404	1 242	1 179	1 163	1 008	938	786	645	585
	1 600	1 855	1 674	1 603	1 497	1 325	1 257	1 240	1 075	1 000	838	688	624
	1 700	1 971	1 779	1 703	1 591	1 408	1 336	1 318	1 143	1 063	891	731	663
	1 800	2 087	1 883	1 803	1 684	1 490	1 414	1 395	1 210	1 125	943	774	702
	1 900	2 203	1 988	1 903	1 778	1 573	1 493	1 473	1 277	1 188	995	817	741
	2 000	2 319	2 092	2 003	1 871	1 656	1 571	1 551	1 344	1 250	1 048	860	780
	2 100	2 435	2 197	2 104	1 965	1 739	1 650	1 628	1 412	1 313	1 100	903	818
	2 200	2 551	2 302	2 204	2 059	1 822	1 729	1 706	1 479	1 375	1 153	946	857
	2 300	2 667	2 406	2 304	2 152	1 904	1 807	1 783	1 546	1 438	1 205	989	896
	2 400	2 783	2 511	2 404	2 246	1 987	1 886	1 861	1 613	1 500	1 257	1 032	935
	2 500	2 898	2 616	2 504	2 339	2 070	1 964	1 938	1 680	1 563	1 310	1 075	974
	2 600	3 014	2 720	2 604	2 433	2 153	2 043	2 016	1 748	1 625	1 362	1 118	1 013
	2 700	3 130	2 825	2 705	2 526	2 236	2 122	2 093	1 815	1 688	1 415	1 161	1 052
	2 800	3 246	2 929	2 805	2 620	2 318	2 200	2 171	1 882	1 751	1 467	1 204	1 091
	2 900	3 362	3 034	2 905	2 714	2 401	2 279	2 248	1 949	1 813	1 519	1 247	1 130
	3 000	3 478	3 139	3 005	2 807	2 484	2 357	2 326	2 016	1 876	1 572	1 290	1 169

TYPE 33 K, VK, VKS

Length [mm]	t_1 / t_2 [°C]	90 / 70			75 / 65			70 / 55			55 / 45		
	t_r [°C]	15	20	22	15	20	22	15	20	22	15	20	22
	400	781	704	673	628	555	526	519	449	418	349	286	259
	500	976	880	842	786	694	658	649	562	522	436	357	323
	600	1 171	1 056	1 010	943	833	790	779	674	626	524	429	388
	700	1 367	1 232	1 178	1 100	972	921	909	786	731	611	500	453
	800	1 562	1 408	1 347	1 257	1 110	1 053	1 039	899	835	698	571	517
	900	1 757	1 583	1 515	1 414	1 249	1 185	1 169	1 011	940	786	643	582
	1 000	1 952	1 759	1 684	1 571	1 388	1 316	1 298	1 124	1 044	873	714	647
	1 100	2 148	1 935	1 852	1 728	1 527	1 448	1 428	1 236	1 148	960	786	711
	1 200	2 343	2 111	2 020	1 885	1 666	1 579	1 558	1 348	1 253	1 047	857	776
	1 300	2 538	2 287	2 189	2 043	1 804	1 711	1 688	1 461	1 357	1 135	929	841
	1 400	2 733	2 463	2 357	2 200	1 943	1 843	1 818	1 573	1 462	1 222	1 000	905
	1 500	2 929	2 639	2 525	2 357	2 082	1 974	1 948	1 685	1 566	1 309	1 071	970
	1 600	3 124	2 815	2 694	2 514	2 221	2 106	2 077	1 798	1 670	1 397	1 143	1 035
	1 700	3 319	2 991	2 862	2 671	2 360	2 238	2 207	1 910	1 775	1 484	1 214	1 099
	1 800	3 514	3 167	3 030	2 828	2 498	2 369	2 337	2 022	1 879	1 571	1 286	1 164
	1 900	3 710	3 343	3 199	2 985	2 637	2 501	2 467	2 135	1 984	1 658	1 357	1 229
	2 000	3 905	3 519	3 367	3 142	2 776	2 632	2 597	2 247	2 088	1 746	1 429	1 293
	2 100	4 100	3 695	3 535	3 299	2 915	2 764	2 727	2 359	2 192	1 833	1 500	1 358
	2 200	4 295	3 871	3 704	3 457	3 054	2 896	2 857	2 472	2 297	1 920	1 571	1 423
	2 300	4 491	4 047	3 872	3 614	3 192	3 027	2 986	2 584	2 401	2 008	1 643	1 487
	2 400	4 686	4 223	4 040	3 771	3 331	3 159	3 116	2 697	2 506	2 095	1 714	1 552
	2 500	4 881	4 399	4 209	3 928	3 470	3 291	3 246	2 809	2 610	2 182	1 786	1 617
	2 600	5 076	4 574	4 377	4 085	3 609	3 422	3 376	2 921	2 714	2 269	1 857	1 681
	2 700	5 272	4 750	4 545	4 242	3 748	3 554	3 506	3 034	2 819	2 357	1 929	1 746
	2 800	5 467	4 926	4 714	4 399	3 886	3 685	3 636	3 146	2 923	2 444	2 000	1 811
	2 900	5 662	5 102	4 882	4 556	4 025	3 817	3 765	3 258	3 028	2 531	2 071	1 875
	3 000	5 857	5 278	5 051	4 713	4 164	3 949	3 895	3 371	3 132	2 619	2 143	1 940

RADIATOR TYPES

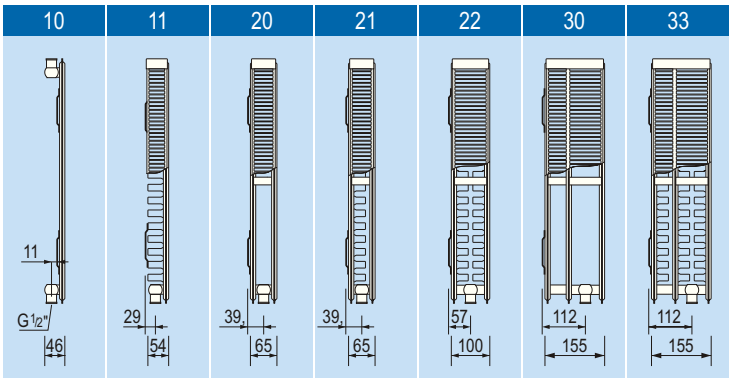

BASIC TECHNICAL DATA

	Type of radiator						
	10	11	20	21	22	30	33
M_T^K [kg.m^{-1}]	8,60	13,70	17,70	19,46	22,99	27,39	33,97
M_T^{VK} [kg.m^{-1}]	8,84	13,94	17,94	19,70	23,22	27,61	34,19
V_T [dm^3.m^{-1}]	2,24	2,24	4,37	4,37	4,37	6,53	6,53
n [-]	1,3072	1,2953	1,3032	1,3338	1,3168	1,2939	1,3151

H - radiator height
M_T^K - Kompakt radiator body weight
M_T^{VK} - Ventil Kompakt radiator body weight
V_T - water volume of radiator body
n - temperature exponent

TYPE 10 K, VK, VKS

t_1 / t_2 [°C]	90 / 70			75 / 65			70 / 55			55 / 45		
t_r [°C]	15	20	22	15	20	22	15	20	22	15	20	22
Length [mm] 400	250	225	215	201	177	168	166	143	133	111	91	82
500	312	281	269	251	222	210	207	179	166	139	114	103
600	375	337	323	301	266	252	249	215	200	167	136	123
700	437	394	376	351	310	294	290	251	233	195	159	144
800	499	450	430	401	354	336	331	287	266	222	182	164
900	562	506	484	452	399	378	373	322	299	250	204	185
1 000	624	562	538	502	443	420	414	358	333	278	227	206
1 100	687	618	592	552	487	462	456	394	366	306	250	226
1 200	749	675	645	602	532	504	497	430	399	334	273	247
1 300	812	731	699	652	576	546	539	466	433	361	295	267
1 400	874	787	753	702	620	588	580	501	466	389	318	288
1 500	936	843	807	753	665	630	621	537	499	417	341	308
1 600	999	900	861	803	709	672	663	573	532	445	364	329
1 700	1 061	956	914	853	753	714	704	609	566	472	386	350
1 800	1 124	1 012	968	903	797	756	746	645	599	500	409	370
1 900	1 186	1 068	1 022	953	842	798	787	681	632	528	432	391
2 000	1 248	1 124	1 076	1 004	886	840	829	716	665	556	454	411
2 100	1 311	1 181	1 129	1 054	930	882	870	752	699	584	477	432
2 200	1 373	1 237	1 183	1 104	975	924	911	788	732	611	500	452
2 300	1 436	1 293	1 237	1 154	1 019	966	953	824	765	639	523	473
2 400	1 498	1 349	1 291	1 204	1 063	1 008	994	860	799	667	545	493
2 500	1 561	1 406	1 345	1 254	1 108	1 050	1 036	896	832	695	568	514
2 600	1 623	1 462	1 398	1 305	1 152	1 092	1 077	931	865	723	591	535
2 700	1 685	1 518	1 452	1 355	1 196	1 134	1 119	967	898	750	613	555
2 800	1 748	1 574	1 506	1 405	1 240	1 176	1 160	1 003	932	778	636	576
2 900	1 810	1 630	1 560	1 455	1 285	1 218	1 201	1 039	965	806	659	596
3 000	1 873	1 687	1 614	1 505	1 329	1 260	1 243	1 075	998	834	682	617

TYPE 11 K, VK, VKS

t_1 / t_2 [°C]	90 / 70			75 / 65			70 / 55			55 / 45		
t_r [°C]	15	20	22	15	20	22	15	20	22	15	20	22
Length [mm] 400	387	349	334	312	276	261	258	223	208	174	142	129
500	484	436	418	390	345	327	322	279	259	217	178	161
600	581	524	501	468	413	392	387	335	311	260	213	193
700	677	611	585	546	482	457	451	391	363	304	249	225
800	774	698	668	624	551	523	516	447	415	347	284	258
900	871	785	752	702	620	588	580	502	467	391	320	290
1 000	968	873	835	780	689	654	645	558	519	434	356	322
1 100	1 065	960	919	857	758	719	709	614	571	477	391	354
1 200	1 161	1 047	1 002	935	827	784	774	670	623	521	427	386
1 300	1 258	1 134	1 086	1 013	896	850	838	726	674	564	462	419
1 400	1 355	1 222	1 169	1 091	965	915	903	781	726	608	498	451
1 500	1 452	1 309	1 253	1 169	1 034	980	967	837	778	651	533	483
1 600	1 549	1 396	1 336	1 247	1 102	1 046	1 032	893	830	695	569	515
1 700	1 645	1 483	1 420	1 325	1 171	1 111	1 096	949	882	738	604	547
1 800	1 742	1 571	1 503	1 403	1 240	1 176	1 160	1 005	934	781	640	580
1 900	1 839	1 658	1 587	1 481	1 309	1 242	1 225	1 061	986	825	675	612
2 000	1 936	1 745	1 670	1 559	1 378	1 307	1 289	1 116	1 038	868	711	644
2 100												
2 200												
2 300												
2 400												
2 500												
2 600												
2 700												
2 800												
2 900												
3 000												

TYPE 20 K, VK, VKS

t_1 / t_2 [°C]	90 / 70			75 / 65			70 / 55			55 / 45		
t_r [°C]	15	20	22	15	20	22	15	20	22	15	20	22
Length [mm] 400	412	371	355	331	293	278	274	237	220	184	151	137
500	514	464	444	414	366	347	342	296	275	230	189	171
600	617	556	533	497	439	417	411	356	331	276	226	205
700	720	649	621	580	512	486	479	415	386	323	264	239
800	823	742	710	663	586	555	548	474	441	369	302	273
900	926	835	799	746	659	625	616	534	496	415	339	307
1 000	1 029	927	888	828	732	694	685	593	551	461	377	342
1 100	1 132	1 020	976	911	805	764	753	652	606	507	415	376
1 200	1 235	1 113	1 065	994	878	833	822	711	661	553	453	410
1 300	1 338	1 206	1 154	1 077	952	902	890	771	716	599	490	444
1 400	1 441	1 298	1 243	1 160	1 025	972	959	830	771	645	528	478
1 500	1 543	1 391	1 331	1 243	1 098	1 041	1 027	889	826	691	566	512
1 600	1 646	1 484	1 420	1 325	1 171	1 111	1 096	948	881	737	603	546
1 700	1 749	1 577	1 509	1 408	1 244	1 180	1 164	1 008	937	783	641	581
1 800	1 852	1 669	1 598	1 491	1 318	1 250	1 233	1 067	992	829	679	615
1 900	1 955	1 762	1 686	1 574	1 391	1 319	1 301	1 126	1 047	875	717	649
2 000	2 058	1 855	1 775	1 657	1 464	1 388	1 370	1 186	1 102	921	754	683
2 100	2 161	1 948	1 864	1 740	1 537	1 458	1 438	1 245	1 157	968	792	717
2 200	2 264	2 040	1 953	1 822	1 610	1 527	1 507	1 304	1 212	1 014	830	751
2 300	2 367	2 133	2 041	1 905	1 684	1 597	1 575	1 363	1 267	1 060	868	786
2 400	2 470	2 226	2 130	1 988	1 757	1 666	1 644	1 423	1 322	1 106	905	820
2 500	2 572	2 319	2 219	2 071	1 830	1 736	1 712	1 482	1 377	1 152	943	854
2 600	2 675	2 411	2 308	2 154	1 903	1 805	1 781	1 541	1 432	1 198	981	888
2 700	2 778	2 504	2 396	2 237	1 976	1 874	1 849	1 601	1 487	1 244	1 018	922
2 800	2 881	2 597	2 485	2 320	2 050	1 944	1 918	1 660	1 543	1 290	1 056	956
2 900	2 984	2 690	2 574	2 402	2 123	2 013	1 986	1 719	1 598	1 336	1 094	991
3 000	3 087	2 782	2 663	2 485	2 196	2 083	2 055	1 778	1 653	1 382	1 132	1 025

TYPE 21 K, VK, VKS

Length [mm]	t_1 / t_2 [°C]	90 / 70			75 / 65			70 / 55			55 / 45		
	t_r [°C]	15	20	22	15	20	22	15	20	22	15	20	22
	400	532	478	457	426	375	355	350	302	280	233	190	171
	500	665	597	571	532	469	444	438	377	350	291	237	214
	600	798	717	685	638	562	532	525	453	420	349	284	257
	700	931	836	799	745	656	621	613	528	490	408	332	300
	800	1 064	956	914	851	750	710	700	604	560	466	379	342
	900	1 197	1 075	1 028	958	843	799	788	679	630	524	427	385
	1 000	1 330	1 195	1 142	1 064	937	887	875	754	700	582	474	428
	1 100	1 463	1 314	1 256	1 170	1 031	976	963	830	770	641	521	471
	1 200	1 596	1 434	1 371	1 277	1 124	1 065	1 050	905	840	699	569	514
	1 300	1 728	1 553	1 485	1 383	1 218	1 154	1 138	981	910	757	616	557
	1 400	1 861	1 673	1 599	1 490	1 312	1 242	1 225	1 056	980	815	664	599
	1 500	1 994	1 792	1 713	1 596	1 406	1 331	1 313	1 132	1 050	873	711	642
	1 600	2 127	1 912	1 827	1 702	1 499	1 420	1 400	1 207	1 119	932	759	685
	1 700	2 260	2 031	1 942	1 809	1 593	1 508	1 488	1 282	1 189	990	806	728
	1 800	2 393	2 151	2 056	1 915	1 687	1 597	1 575	1 358	1 259	1 048	853	771
	1 900	2 526	2 270	2 170	2 022	1 780	1 686	1 663	1 433	1 329	1 106	901	813
	2 000	2 659	2 390	2 284	2 128	1 874	1 775	1 750	1 509	1 399	1 165	948	856
	2 100	2 792	2 509	2 398	2 234	1 968	1 863	1 838	1 584	1 469	1 223	996	899
	2 200	2 925	2 629	2 513	2 341	2 061	1 952	1 925	1 660	1 539	1 281	1 043	942
	2 300	3 058	2 748	2 627	2 447	2 155	2 041	2 013	1 735	1 609	1 339	1 090	985
	2 400	3 191	2 868	2 741	2 554	2 249	2 130	2 100	1 811	1 679	1 397	1 138	1 027
	2 500	3 324	2 987	2 855	2 660	2 343	2 218	2 188	1 886	1 749	1 456	1 185	1 070
	2 600	3 457	3 107	2 970	2 766	2 436	2 307	2 275	1 961	1 819	1 514	1 233	1 113
	2 700	3 590	3 226	3 084	2 873	2 530	2 396	2 363	2 037	1 889	1 572	1 280	1 156
	2 800	3 723	3 346	3 198	2 979	2 624	2 485	2 450	2 112	1 959	1 630	1 327	1 199
	2 900	3 856	3 465	3 312	3 086	2 717	2 573	2 538	2 188	2 029	1 689	1 375	1 242
	3 000	3 989	3 585	3 426	3 192	2 811	2 662	2 625	2 263	2 099	1 747	1 422	1 284

TYPE 22 K, VK, VKS

Length [mm]	t_1 / t_2 [°C]	90 / 70			75 / 65			70 / 55			55 / 45		
	t_r [°C]	15	20	22	15	20	22	15	20	22	15	20	22
	400	697	627	600	559	493	467	461	398	370	308	252	228
	500	871	784	750	699	617	584	576	498	462	385	315	285
	600	1 045	941	899	839	740	701	691	597	554	463	378	341
	700	1 219	1 097	1 049	979	863	818	807	697	647	540	440	398
	800	1 393	1 254	1 199	1 118	986	935	922	796	739	617	503	455
	900	1 568	1 411	1 349	1 258	1 110	1 052	1 037	896	832	694	566	512
	1 000	1 742	1 568	1 499	1 398	1 233	1 168	1 152	995	924	771	629	569
	1 100	1 916	1 724	1 649	1 538	1 356	1 285	1 268	1 095	1 017	848	692	626
	1 200	2 090	1 881	1 799	1 677	1 480	1 402	1 383	1 195	1 109	925	755	683
	1 300	2 264	2 038	1 949	1 817	1 603	1 519	1 498	1 294	1 201	1 002	818	740
	1 400	2 439	2 195	2 099	1 957	1 726	1 636	1 613	1 394	1 294	1 079	881	797
	1 500	2 613	2 351	2 249	2 097	1 850	1 753	1 729	1 493	1 386	1 156	944	854
	1 600	2 787	2 508	2 399	2 237	1 973	1 870	1 844	1 593	1 479	1 233	1 007	910
	1 700	2 961	2 665	2 549	2 376	2 096	1 986	1 959	1 692	1 571	1 311	1 070	967
	1 800	3 135	2 822	2 698	2 516	2 219	2 103	2 074	1 792	1 663	1 388	1 133	1 024
	1 900	3 309	2 978	2 848	2 656	2 343	2 220	2 190	1 891	1 756	1 465	1 196	1 081
	2 000	3 484	3 135	2 998	2 796	2 466	2 337	2 305	1 991	1 848	1 542	1 259	1 138
	2 100	3 658	3 292	3 148	2 936	2 589	2 454	2 420	2 090	1 941	1 619	1 321	1 195
	2 200	3 832	3 449	3 298	3 075	2 713	2 571	2 535	2 190	2 033	1 696	1 384	1 252
	2 300	4 006	3 605	3 448	3 215	2 836	2 687	2 651	2 290	2 126	1 773	1 447	1 309
	2 400	4 180	3 762	3 598	3 355	2 959	2 804	2 766	2 389	2 218	1 850	1 510	1 366
	2 500	4 355	3 919	3 748	3 495	3 083	2 921	2 881	2 489	2 310	1 927	1 573	1 423
	2 600	4 529	4 076	3 898	3 634	3 206	3 038	2 996	2 588	2 403	2 004	1 636	1 479
	2 700	4 703	4 232	4 048	3 774	3 329	3 155	3 112	2 688	2 495	2 081	1 699	1 536
	2 800	4 877	4 389	4 198	3 914	3 452	3 272	3 227	2 787	2 588	2 158	1 762	1 593
	2 900	5 051	4 546	4 347	4 054	3 576	3 389	3 342	2 887	2 680	2 236	1 825	1 650
	3 000	5 225	4 703	4 497	4 194	3 699	3 505	3 457	2 986	2 772	2 313	1 888	1 707

TYPE 30 K, VK, VKS

Length [mm]	t_1 / t_2 [°C]	90 / 70			75 / 65			70 / 55			55 / 45		
	t_r [°C]	15	20	22	15	20	22	15	20	22	15	20	22
	400	586	529	506	472	418	396	391	338	315	263	216	195
	500	733	661	633	591	522	495	488	423	393	329	270	244
	600	880	793	759	709	626	594	586	508	472	395	323	293
	700	1 026	925	886	827	731	693	684	592	550	461	377	342
	800	1 173	1 057	1 012	945	835	792	782	677	629	526	431	391
	900	1 319	1 190	1 139	1 063	940	891	879	761	708	592	485	439
	1 000	1 466	1 322	1 265	1 181	1 044	990	977	846	786	658	539	488
	1 100	1 613	1 454	1 392	1 299	1 148	1 089	1 075	931	865	724	593	537
	1 200	1 759	1 586	1 518	1 417	1 253	1 188	1 172	1 015	944	790	647	586
	1 300	1 906	1 718	1 645	1 535	1 357	1 287	1 270	1 100	1 022	855	701	635
	1 400	2 052	1 850	1 771	1 653	1 462	1 386	1 368	1 184	1 101	921	755	684
	1 500	2 199	1 983	1 898	1 772	1 566	1 485	1 465	1 269	1 180	987	809	732
	1 600	2 346	2 115	2 024	1 890	1 670	1 584	1 563	1 354	1 258	1 053	863	781
	1 700	2 492	2 247	2 151	2 008	1 775	1 683	1 661	1 438	1 337	1 119	916	830
	1 800	2 639	2 379	2 277	2 126	1 879	1 783	1 759	1 523	1 416	1 185	970	879
	1 900	2 785	2 511	2 404	2 244	1 984	1 882	1 856	1 607	1 494	1 250	1 024	928
	2 000	2 932	2 644	2 530	2 362	2 088	1 981	1 954	1 692	1 573	1 316	1 078	977
	2 100	3 079	2 776	2 657	2 480	2 192	2 080	2 052	1 777	1 651	1 382	1 132	1 025
	2 200	3 225	2 908	2 783	2 598	2 297	2 179	2 149	1 861	1 730	1 448	1 186	1 074
	2 300	3 372	3 040	2 910	2 716	2 401	2 278	2 247	1 946	1 809	1 514	1 240	1 123
	2 400	3 518	3 172	3 036	2 834	2 506	2 377	2 345	2 030	1 887	1 579	1 294	1 172
	2 500	3 665	3 304	3 163	2 953	2 610	2 476	2 442	2 115	1 966	1 645	1 348	1 221
	2 600	3 812	3 437	3 289	3 071	2 714	2 575	2 540	2 200	2 045	1 711	1 402	1 270
	2 700	3 958	3 569	3 416	3 189	2 819	2 674	2 638	2 284	2 123	1 777	1 456	1 318
	2 800	4 105	3 701	3 542	3 307	2 923	2 773	2 735	2 369	2 202	1 843	1 509	1 367
	2 900	4 251	3 833	3 669	3 425	3 028	2 872	2 833	2 453	2 281	1 908	1 563	1 416
	3 000	4 398	3 965	3 795	3 543	3 132	2 971	2 931	2 538	2 359	1 974	1 617	1 465

TYPE 33 K, VK, VKS

Length [mm]	t_1 / t_2 [°C]	90 / 70			75 / 65			70 / 55			55 / 45		
	t_r [°C]	15	20	22	15	20	22	15	20	22	15	20	22
	400	989	890	851	794	700	664	655	566	525	438	358	324
	500	1 236	1 113	1 064	992	876	830	818	707	656	548	447	404
	600	1 483	1 335	1 277	1 191	1 051	996	982	848	788	657	537	485
	700	1 731	1 558	1 490	1 389	1 226	1 162	1 146	990	919	767	626	566
	800	1 978	1 780	1 703	1 588	1 401	1 328	1 309	1 131	1 050	876	716	647
	900	2 225	2 003	1 916	1 786	1 576	1 494	1 473	1 273	1 182	986	805	728
	1 000	2 472	2 225	2 128	1 985	1 751	1 659	1 637	1 414	1 313	1 095	894	809
	1 100	2 720	2 448	2 341	2 183	1 926	1 825	1 800	1 555	1 444	1 205	984	890
	1 200	2 967	2 671	2 554	2 382	2 101	1 991	1 964	1 697	1 575	1 314	1 073	971
	1 300	3 214	2 893	2 767	2 580	2 276	2 157	2 128	1 838	1 707	1 424	1 163	1 052
	1 400	3 461	3 116	2 980	2 779	2 451	2 323	2 291	1 980	1 838	1 534	1 252	1 132
	1 500	3 709	3 338	3 193	2 977	2 627	2 489	2 455	2 121	1 969	1 643	1 342	1 213
	1 600	3 956	3 561	3 405	3 176	2 802	2 655	2 619	2 262	2 101	1 753	1 431	1 294
	1 700	4 203	3 783	3 618	3 374	2 977	2 821	2 783	2 404	2 232	1 862	1 520	1 375
	1 800	4 450	4 006	3 831	3 573	3 152	2 987	2 946	2 545	2 363	1 972	1 610	1 456
	1 900	4 698	4 228	4 044	3 771	3 327	3 153	3 110	2 687	2 494	2 081	1 699	1 537
	2 000	4 945	4 451	4 257	3 970	3 502	3 319	3 274	2 828	2 626	2 191	1 789	1 618
	2 100	5 192	4 673	4 470	4 168	3 677	3 485	3 437	2 970	2 757	2 300	1 878	1 699
	2 200	5 439	4 896	4 682	4 367	3 852	3 651	3 601	3 111	2 888	2 410	1 968	1 780
	2 300	5 687	5 119	4 895	4 565	4 027	3 817	3 765	3 252	3 020	2 519	2 057	1 860
	2 400	5 934	5 341	5 108	4 764	4 202	3 983	3 928	3 394	3 151	2 629	2 147	1 941
	2 500	6 181	5 564	5 321	4 962	4 378	4 149	4 092	3 535	3 282	2 739	2 236	2 022
	2 600	6 428	5 786	5 534	5 161	4 553	4 315	4 256	3 677	3 413	2 848	2 325	2 103
	2 700	6 676	6 009	5 747	5 359	4 728	4 481	4 419	3 818	3 545	2 958	2 415	2 184
	2 800	6 923	6 231	5 960	5 558	4 903	4 647	4 583	3 959	3 676	3 067	2 504	2 265
	2 900	7 170	6 454	6 172	5 756	5 078	4 812	4 747	4 101	3 807	3 177	2 594	2 346
	3 000	7 417	6 676	6 385	5 954	5 253	4 978	4 910	4 242	3 939	3 286	2 683	2 427

RADIATOR TYPES

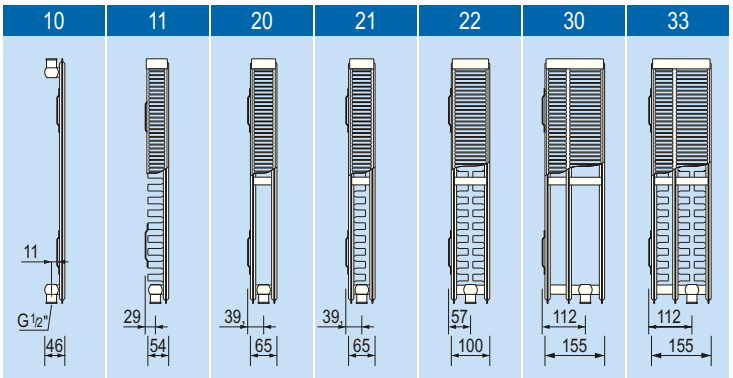

BASIC TECHNICAL DATA

	Type of radiator						
	10	11	20	21	22	30	33
M_T^K [kg.m^{-1}]	10,60	17,05	21,30	23,98	27,60	33,17	40,70
M_T^{VK} [kg.m^{-1}]	10,87	17,32	21,57	24,25	27,86	33,43	40,95
V_T [dm^3.m^{-1}]	2,67	2,67	5,23	5,23	5,23	7,87	7,87
n [-]	1,2958	1,2994	1,3094	1,3437	1,3250	1,3048	1,3298

H - radiator height
M_T^K - Kompakt radiator body weight
M_T^{VK} - Ventil Kompakt radiator body weight
V_T - water volume of radiator body
n - temperature exponent

TYPE 10 K, VK, VKS

t_1 / t_2 [°C]	90 / 70			75 / 65			70 / 55			55 / 45		
t_r [°C]	15	20	22	15	20	22	15	20	22	15	20	22
Length [mm]												
400	301	272	260	243	214	203	201	174	161	135	111	100
500	377	339	325	303	268	254	251	217	202	169	138	125
600	452	407	390	364	322	305	301	261	242	203	166	150
700	527	475	455	425	375	356	351	304	283	236	194	175
800	602	543	520	485	429	407	401	347	323	270	221	200
900	678	611	585	546	482	458	451	391	363	304	249	225
1 000	753	679	650	606	536	508	502	434	404	338	276	250
1 100	828	747	715	667	590	559	552	478	444	371	304	275
1 200	904	815	780	728	643	610	602	521	484	405	332	301
1 300	979	882	845	788	697	661	652	564	525	439	359	326
1 400	1 054	950	910	849	750	712	702	608	565	473	387	351
1 500	1 130	1 018	974	910	804	763	752	651	605	506	415	376
1 600	1 205	1 086	1 039	970	858	813	802	695	646	540	442	401
1 700	1 280	1 154	1 104	1 031	911	864	853	738	686	574	470	426
1 800	1 355	1 222	1 169	1 092	965	915	903	782	726	608	498	451
1 900	1 431	1 290	1 234	1 152	1 018	966	953	825	767	641	525	476
2 000	1 506	1 358	1 299	1 213	1 072	1 017	1 003	868	807	675	553	501
2 100	1 581	1 426	1 364	1 274	1 126	1 068	1 053	912	848	709	581	526
2 200	1 657	1 493	1 429	1 334	1 179	1 118	1 103	955	888	743	608	551
2 300	1 732	1 561	1 494	1 395	1 233	1 169	1 154	999	928	777	636	576
2 400	1 807	1 629	1 559	1 456	1 286	1 220	1 204	1 042	969	810	664	601
2 500	1 883	1 697	1 624	1 516	1 340	1 271	1 254	1 086	1 009	844	691	626
2 600	1 958	1 765	1 689	1 577	1 394	1 322	1 304	1 129	1 049	878	719	651
2 700	2 033	1 833	1 754	1 637	1 447	1 373	1 354	1 172	1 090	912	747	676
2 800	2 108	1 901	1 819	1 698	1 501	1 423	1 404	1 216	1 130	945	774	701
2 900	2 184	1 969	1 884	1 759	1 554	1 474	1 454	1 259	1 170	979	802	726
3 000	2 259	2 037	1 949	1 819	1 608	1 525	1 505	1 303	1 211	1 013	829	751

TYPE 11 K, VK, VKS

t_1 / t_2 [°C]	90 / 70			75 / 65			70 / 55			55 / 45		
t_r [°C]	15	20	22	15	20	22	15	20	22	15	20	22
Length [mm]												
400	465	419	401	374	330	313	309	268	249	208	170	154
500	581	523	501	467	413	392	386	334	311	260	213	193
600	697	628	601	561	496	470	464	401	373	312	255	231
700	813	733	701	654	578	548	541	468	435	364	298	270
800	929	837	801	748	661	627	618	535	497	416	340	308
900	1 045	942	902	841	743	705	695	602	559	468	383	347
1 000	1 162	1 047	1 002	935	826	783	773	669	621	520	425	385
1 100	1 278	1 151	1 102	1 028	909	862	850	736	684	572	468	424
1 200	1 394	1 256	1 202	1 122	991	940	927	803	746	624	510	462
1 300	1 510	1 361	1 302	1 215	1 074	1 018	1 005	869	808	676	553	501
1 400	1 626	1 466	1 402	1 309	1 156	1 097	1 082	936	870	727	595	539
1 500	1 742	1 570	1 503	1 402	1 239	1 175	1 159	1 003	932	779	638	578
1 600	1 858	1 675	1 603	1 496	1 322	1 253	1 236	1 070	994	831	681	616
1 700	1 975	1 780	1 703	1 589	1 404	1 332	1 314	1 137	1 056	883	723	655
1 800	2 091	1 884	1 803	1 683	1 487	1 410	1 391	1 204	1 119	935	766	693
1 900	2 207	1 989	1 903	1 776	1 569	1 488	1 468	1 271	1 181	987	808	732
2 000	2 323	2 094	2 003	1 870	1 652	1 567	1 545	1 338	1 243	1 039	851	770
2 100												
2 200												
2 300												
2 400												
2 500												
2 600												
2 700												
2 800												
2 900												
3 000												

TYPE 20 K, VK, VKS

t_1 / t_2 [°C]	90 / 70			75 / 65			70 / 55			55 / 45		
t_r [°C]	15	20	22	15	20	22	15	20	22	15	20	22
Length [mm]												
400	494	445	426	398	351	333	328	284	264	221	180	163
500	618	557	533	497	439	416	411	355	330	276	226	204
600	742	668	639	596	527	499	493	426	396	331	271	245
700	865	779	746	696	615	583	575	497	462	386	316	286
800	989	891	852	795	702	666	657	568	528	441	361	327
900	1 112	1 002	959	895	790	749	739	639	594	496	406	368
1 000	1 236	1 114	1 065	994	878	832	821	710	660	552	451	408
1 100	1 360	1 225	1 172	1 094	966	916	903	781	726	607	496	449
1 200	1 483	1 336	1 279	1 193	1 054	999	985	852	792	662	541	490
1 300	1 607	1 448	1 385	1 292	1 141	1 082	1 068	923	858	717	586	531
1 400	1 730	1 559	1 492	1 392	1 229	1 165	1 150	995	924	772	632	572
1 500	1 854	1 670	1 598	1 491	1 317	1 249	1 232	1 066	990	827	677	613
1 600	1 978	1 782	1 705	1 591	1 405	1 332	1 314	1 137	1 056	882	722	653
1 700	2 101	1 893	1 811	1 690	1 493	1 415	1 396	1 208	1 122	938	767	694
1 800	2 225	2 004	1 918	1 789	1 580	1 498	1 478	1 279	1 188	993	812	735
1 900	2 348	2 116	2 024	1 889	1 668	1 582	1 560	1 350	1 254	1 048	857	776
2 000	2 472	2 227	2 131	1 988	1 756	1 665	1 642	1 421	1 320	1 103	902	817
2 100	2 596	2 338	2 237	2 088	1 844	1 748	1 725	1 492	1 386	1 158	947	858
2 200	2 719	2 450	2 344	2 187	1 932	1 831	1 807	1 563	1 452	1 213	992	898
2 300	2 843	2 561	2 450	2 287	2 019	1 915	1 889	1 634	1 518	1 269	1 038	939
2 400	2 966	2 673	2 557	2 386	2 107	1 998	1 971	1 705	1 584	1 324	1 083	980
2 500	3 090	2 784	2 664	2 485	2 195	2 081	2 053	1 776	1 650	1 379	1 128	1 021
2 600	3 214	2 895	2 770	2 585	2 283	2 164	2 135	1 847	1 716	1 434	1 173	1 062
2 700	3 337	3 007	2 877	2 684	2 371	2 248	2 217	1 918	1 782	1 489	1 218	1 103
2 800	3 461	3 118	2 983	2 784	2 458	2 331	2 299	1 989	1 848	1 544	1 263	1 143
2 900	3 585	3 229	3 090	2 883	2 546	2 414	2 382	2 060	1 914	1 599	1 308	1 184
3 000	3 708	3 341	3 196	2 982	2 634	2 497	2 464	2 131	1 980	1 655	1 353	1 225

TYPE 21 K, VK, VKS

t_1 / t_2 [°C]	90 / 70			75 / 65			70 / 55			55 / 45		
t_r [°C]	15	20	22	15	20	22	15	20	22	15	20	22
Length [mm]												
400	635	570	544	507	446	422	416	359	332	276	225	203
500	793	712	681	634	558	528	520	448	415	345	281	253
600	952	855	817	760	669	633	624	538	498	414	337	304
700	1 110	997	953	887	781	739	729	627	582	483	393	355
800	1 269	1 140	1 089	1 014	892	844	833	717	665	552	449	405
900	1 428	1 282	1 225	1 141	1 004	950	937	807	748	621	505	456
1 000	1 586	1 425	1 361	1 267	1 115	1 055	1 041	896	831	690	561	506
1 100	1 745	1 567	1 497	1 394	1 227	1 161	1 145	986	914	759	617	557
1 200	1 904	1 709	1 633	1 521	1 338	1 267	1 249	1 076	997	829	674	608
1 300	2 062	1 852	1 769	1 648	1 450	1 372	1 353	1 165	1 080	898	730	658
1 400	2 221	1 994	1 906	1 774	1 561	1 478	1 457	1 255	1 163	967	786	709
1 500	2 379	2 137	2 042	1 901	1 673	1 583	1 561	1 344	1 246	1 036	842	760
1 600	2 538	2 279	2 178	2 028	1 784	1 689	1 665	1 434	1 329	1 105	898	810
1 700	2 697	2 422	2 314	2 154	1 896	1 794	1 769	1 524	1 412	1 174	954	861
1 800	2 855	2 564	2 450	2 281	2 007	1 900	1 873	1 613	1 495	1 243	1 010	912
1 900	3 014	2 707	2 586	2 408	2 119	2 005	1 977	1 703	1 578	1 312	1 066	962
2 000	3 173	2 849	2 722	2 535	2 230	2 111	2 081	1 793	1 662	1 381	1 123	1 013
2 100	3 331	2 992	2 858	2 661	2 342	2 217	2 186	1 882	1 745	1 450	1 179	1 064
2 200	3 490	3 134	2 994	2 788	2 453	2 322	2 290	1 972	1 828	1 519	1 235	1 114
2 300	3 648	3 276	3 131	2 915	2 565	2 428	2 394	2 061	1 911	1 588	1 291	1 165
2 400	3 807	3 419	3 267	3 042	2 676	2 533	2 498	2 151	1 994	1 657	1 347	1 216
2 500	3 966	3 561	3 403	3 168	2 788	2 639	2 602	2 241	2 077	1 726	1 403	1 266
2 600	4 124	3 704	3 539	3 295	2 899	2 744	2 706	2 330	2 160	1 795	1 459	1 317
2 700	4 283	3 846	3 675	3 422	3 011	2 850	2 810	2 420	2 243	1 864	1 515	1 368
2 800	4 442	3 989	3 811	3 549	3 122	2 955	2 914	2 510	2 326	1 933	1 572	1 418
2 900	4 600	4 131	3 947	3 675	3 234	3 061	3 018	2 599	2 409	2 002	1 628	1 469
3 000	4 759	4 274	4 083	3 802	3 345	3 166	3 122	2 689	2 492	2 071	1 684	1 519

TYPE 22 K, VK, VKS

t_1 / t_2 [°C]	90 / 70			75 / 65			70 / 55			55 / 45		
t_r [°C]	15	20	22	15	20	22	15	20	22	15	20	22
Length [mm]												
400	832	749	716	667	588	557	549	474	440	367	299	270
500	1 041	936	895	834	735	696	687	593	550	458	374	338
600	1 249	1 123	1 074	1 001	882	836	824	711	660	550	448	405
700	1 457	1 310	1 253	1 168	1 029	975	961	830	770	641	523	473
800	1 665	1 497	1 432	1 334	1 176	1 114	1 099	948	880	733	598	540
900	1 873	1 685	1 611	1 501	1 323	1 253	1 236	1 067	990	825	672	608
1 000	2 081	1 872	1 789	1 668	1 470	1 393	1 373	1 185	1 100	916	747	675
1 100	2 289	2 059	1 968	1 835	1 617	1 532	1 511	1 304	1 210	1 008	822	743
1 200	2 497	2 246	2 147	2 001	1 764	1 671	1 648	1 422	1 320	1 100	896	810
1 300	2 705	2 433	2 326	2 168	1 911	1 810	1 785	1 541	1 430	1 191	971	878
1 400	2 914	2 620	2 505	2 335	2 058	1 950	1 923	1 659	1 540	1 283	1 046	945
1 500	3 122	2 808	2 684	2 502	2 205	2 089	2 060	1 778	1 650	1 375	1 121	1 013
1 600	3 330	2 995	2 863	2 669	2 352	2 228	2 197	1 896	1 760	1 466	1 195	1 080
1 700	3 538	3 182	3 042	2 835	2 499	2 367	2 335	2 015	1 870	1 558	1 270	1 148
1 800	3 746	3 369	3 221	3 002	2 646	2 507	2 472	2 133	1 980	1 649	1 345	1 215
1 900	3 954	3 556	3 400	3 169	2 793	2 646	2 609	2 252	2 090	1 741	1 419	1 283
2 000	4 162	3 743	3 579	3 336	2 940	2 785	2 747	2 370	2 200	1 833	1 494	1 350
2 100	4 370	3 931	3 758	3 503	3 087	2 924	2 884	2 489	2 310	1 924	1 569	1 418
2 200	4 578	4 118	3 937	3 669	3 234	3 064	3 022	2 607	2 420	2 016	1 644	1 485
2 300	4 787	4 305	4 116	3 836	3 381	3 203	3 159	2 726	2 530	2 108	1 718	1 553
2 400	4 995	4 492	4 295	4 003	3 528	3 342	3 296	2 845	2 639	2 199	1 793	1 620
2 500	5 203	4 679	4 474	4 170	3 675	3 482	3 434	2 963	2 749	2 291	1 868	1 688
2 600	5 411	4 866	4 653	4 336	3 822	3 621	3 571	3 082	2 859	2 383	1 942	1 755
2 700	5 619	5 054	4 832	4 503	3 969	3 760	3 708	3 200	2 969	2 474	2 017	1 823
2 800	5 827	5 241	5 011	4 670	4 116	3 899	3 846	3 319	3 079	2 566	2 092	1 890
2 900	6 035	5 428	5 189	4 837	4 263	4 039	3 983	3 437	3 189	2 657	2 167	1 958
3 000	6 243	5 615	5 368	5 004	4 410	4 178	4 120	3 556	3 299	2 749	2 241	2 025

TYPE 30 K, VK, VKS

t_1 / t_2 [°C]	90 / 70			75 / 65			70 / 55			55 / 45		
t_r [°C]	15	20	22	15	20	22	15	20	22	15	20	22
Length [mm]												
400	706	636	608	568	501	475	469	405	377	315	257	233
500	882	795	760	709	627	594	586	507	471	393	322	291
600	1 059	954	912	851	752	713	703	608	565	472	386	349
700	1 235	1 113	1 065	993	877	832	820	710	659	551	450	408
800	1 412	1 272	1 217	1 135	1 002	950	938	811	753	629	515	466
900	1 588	1 431	1 369	1 277	1 128	1 069	1 055	912	847	708	579	524
1 000	1 765	1 590	1 521	1 419	1 253	1 188	1 172	1 014	942	787	643	582
1 100	1 941	1 748	1 673	1 561	1 378	1 307	1 289	1 115	1 036	865	708	641
1 200	2 117	1 907	1 825	1 703	1 504	1 426	1 406	1 216	1 130	944	772	699
1 300	2 294	2 066	1 977	1 845	1 629	1 544	1 523	1 318	1 224	1 023	836	757
1 400	2 470	2 225	2 129	1 986	1 754	1 663	1 641	1 419	1 318	1 101	901	815
1 500	2 647	2 384	2 281	2 128	1 880	1 782	1 758	1 520	1 412	1 180	965	874
1 600	2 823	2 543	2 433	2 270	2 005	1 901	1 875	1 622	1 507	1 259	1 029	932
1 700	3 000	2 702	2 585	2 412	2 130	2 020	1 992	1 723	1 601	1 337	1 094	990
1 800	3 176	2 861	2 737	2 554	2 255	2 138	2 109	1 824	1 695	1 416	1 158	1 048
1 900	3 353	3 020	2 889	2 696	2 381	2 257	2 227	1 926	1 789	1 495	1 222	1 106
2 000	3 529	3 179	3 041	2 838	2 506	2 376	2 344	2 027	1 883	1 573	1 287	1 165
2 100	3 705	3 338	3 194	2 980	2 631	2 495	2 461	2 129	1 977	1 652	1 351	1 223
2 200	3 882	3 497	3 346	3 122	2 757	2 614	2 578	2 230	2 072	1 731	1 415	1 281
2 300	4 058	3 656	3 498	3 264	2 882	2 732	2 695	2 331	2 166	1 810	1 480	1 339
2 400	4 235	3 815	3 650	3 405	3 007	2 851	2 813	2 433	2 260	1 888	1 544	1 398
2 500	4 411	3 974	3 802	3 547	3 133	2 970	2 930	2 534	2 354	1 967	1 609	1 456
2 600	4 588	4 133	3 954	3 689	3 258	3 089	3 047	2 635	2 448	2 046	1 673	1 514
2 700	4 764	4 292	4 106	3 831	3 383	3 208	3 164	2 737	2 542	2 124	1 737	1 572
2 800	4 941	4 451	4 258	3 973	3 508	3 326	3 281	2 838	2 636	2 203	1 802	1 631
2 900	5 117	4 610	4 410	4 115	3 634	3 445	3 398	2 939	2 731	2 282	1 866	1 689
3 000	5 294	4 769	4 562	4 257	3 759	3 564	3 516	3 041	2 825	2 360	1 930	1 747

TYPE 33 K, VK, VKS

t_1 / t_2 [°C]	90 / 70			75 / 65			70 / 55			55 / 45		
t_r [°C]	15	20	22	15	20	22	15	20	22	15	20	22
Length [mm]												
400	1 186	1 066	1 019	949	836	792	781	674	625	521	424	383
500	1 482	1 332	1 274	1 187	1 046	990	977	842	781	651	530	479
600	1 778	1 599	1 528	1 424	1 255	1 188	1 172	1 011	938	781	636	575
700	2 075	1 865	1 783	1 661	1 464	1 386	1 367	1 179	1 094	911	742	670
800	2 371	2 132	2 038	1 899	1 673	1 584	1 563	1 348	1 250	1 041	848	766
900	2 668	2 398	2 293	2 136	1 882	1 782	1 758	1 516	1 406	1 171	954	862
1 000	2 964	2 665	2 547	2 374	2 091	1 981	1 953	1 685	1 563	1 301	1 060	958
1 100	3 260	2 931	2 802	2 611	2 300	2 179	2 148	1 853	1 719	1 431	1 166	1 053
1 200	3 557	3 198	3 057	2 848	2 509	2 377	2 344	2 022	1 875	1 562	1 272	1 149
1 300	3 853	3 464	3 311	3 086	2 718	2 575	2 539	2 190	2 032	1 692	1 378	1 245
1 400	4 150	3 731	3 566	3 323	2 927	2 773	2 734	2 358	2 188	1 822	1 484	1 341
1 500	4 446	3 997	3 821	3 560	3 137	2 971	2 930	2 527	2 344	1 952	1 590	1 436
1 600	4 742	4 264	4 076	3 798	3 346	3 169	3 125	2 695	2 500	2 082	1 696	1 532
1 700	5 039	4 530	4 330	4 035	3 555	3 367	3 320	2 864	2 657	2 212	1 802	1 628
1 800	5 335	4 796	4 585	4 272	3 764	3 565	3 516	3 032	2 813	2 342	1 908	1 724
1 900	5 632	5 063	4 840	4 510	3 973	3 763	3 711	3 201	2 969	2 472	2 014	1 820
2 000	5 928	5 329	5 094	4 747	4 182	3 961	3 906	3 369	3 125	2 603	2 120	1 915
2 100	6 224	5 596	5 349	4 984	4 391	4 159	4 102	3 538	3 282	2 733	2 226	2 011
2 200	6 521	5 862	5 604	5 222	4 600	4 357	4 297	3 706	3 438	2 863	2 332	2 107
2 300	6 817	6 129	5 859	5 459	4 809	4 555	4 492	3 875	3 594	2 993	2 438	2 203
2 400	7 114	6 395	6 113	5 697	5 018	4 753	4 688	4 043	3 751	3 123	2 544	2 298
2 500	7 410	6 662	6 368	5 934	5 228	4 951	4 883	4 211	3 907	3 253	2 650	2 394
2 600	7 706	6 928	6 623	6 171	5 437	5 149	5 078	4 380	4 063	3 383	2 756	2 490
2 700	8 003	7 195	6 878	6 409	5 646	5 347	5 273	4 548	4 219	3 513	2 862	2 586
2 800	8 299	7 461	7 132	6 646	5 855	5 545	5 469	4 717	4 376	3 644	2 968	2 681
2 900	8 596	7 728	7 387	6 883	6 064	5 743	5 664	4 885	4 532	3 774	3 074	2 777
3 000	8 892	7 994	7 642	7 121	6 273	5 942	5 859	5 054	4 688	3 904	3 180	2 873

RADIATOR TYPES

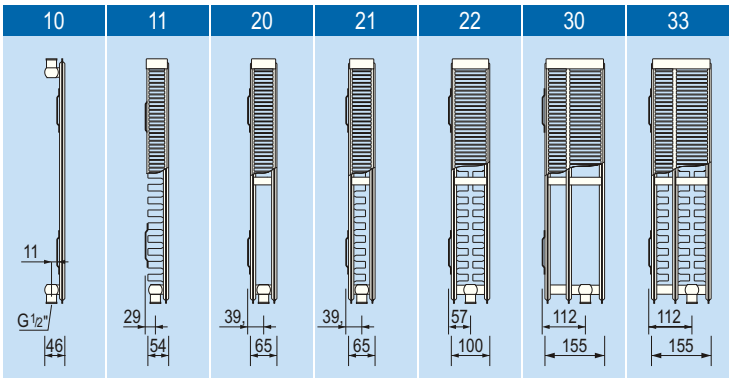

BASIC TECHNICAL DATA

	Type of radiator						
	10	11	20	21	22	30	33
M_T^K [kg.m^{-1}]	11,70	-	23,55	27,00	31,20	35,95	46,05
M_T^{VK} [kg.m^{-1}]	-	-	-	-	-	-	-
V_T [dm^3.m^{-1}]	2,80	-	5,30	5,30	5,35	8,15	8,15
n [-]	1,3145	-	1,3252	1,3030	1,3413	1,3053	1,3357

H - radiator height
M_T^K - Kompakt radiator body weight
M_T^{VK} - Ventil Kompakt radiator body weight
V_T - water volume of radiator body
n - temperature exponent

TYPE 10 K

t_1 / t_2 [°C]	90 / 70			75 / 65			70 / 55			55 / 45		
t_r [°C]	15	20	22	15	20	22	15	20	22	15	20	22
Length [mm] 400	329	296	283	264	233	221	218	188	175	146	119	108
500	412	370	354	330	292	276	272	235	219	182	149	135
600	494	445	425	396	350	332	327	283	262	219	179	162
700	576	519	496	463	408	387	381	330	306	255	209	189
800	658	593	567	529	466	442	436	377	350	292	238	216
900	741	667	638	595	525	497	490	424	393	328	268	242
1 000	823	741	709	661	583	553	545	471	437	365	298	269
1 100												
1 200	988	889	850	793	700	663	654	565	525	438	357	323
1 300												
1 400	1 152	1 037	992	925	816	774	763	659	612	511	417	377
1 500												
1 600	1 317	1 185	1 134	1 057	933	884	872	753	699	584	477	431
1 700												
1 800	1 482	1 334	1 275	1 189	1 049	995	981	848	787	657	536	485
1 900												
2 000	1 646	1 482	1 417	1 322	1 166	1 105	1 090	942	874	730	596	539
2 100												
2 200												
2 300												
2 400												
2 500												
2 600												
2 700												
2 800												
2 900												
3 000												

TYPE 11 K

t_1 / t_2 [°C]	90 / 70			75 / 65			70 / 55			55 / 45		
t_r [°C]	15	20	22	15	20	22	15	20	22	15	20	22
Length [mm] 400												
500												
600												
700												
800												
900												
1 000												
1 100												
1 200												
1 300												
1 400												
1 500												
1 600	Type 11, height 550 mm is not manufactured !											
1 700												
1 800												
1 900												
2 000												
2 100												
2 200												
2 300												
2 400												
2 500												
2 600												
2 700												
2 800												
2 900												
3 000												

TYPE 20 K

t_1 / t_2 [°C]	90 / 70			75 / 65			70 / 55			55 / 45		
t_r [°C]	15	20	22	15	20	22	15	20	22	15	20	22
Length [mm] 400	533	480	459	428	378	358	353	306	284	237	194	175
500	666	600	574	535	473	448	442	382	355	296	242	219
600	799	720	688	642	567	538	530	459	426	356	291	263
700	932	839	803	749	662	627	619	535	497	415	339	307
800	1 065	959	918	856	756	717	707	611	568	474	388	351
900	1 198	1 079	1 033	963	851	806	795	688	639	534	436	395
1 000	1 331	1 199	1 147	1 070	945	896	884	764	710	593	485	439
1 100												
1 200	1 598	1 439	1 377	1 284	1 134	1 075	1 060	917	852	712	582	526
1 300												
1 400	1 864	1 679	1 606	1 498	1 323	1 254	1 237	1 070	994	830	679	614
1 500												
1 600	2 130	1 919	1 836	1 713	1 512	1 433	1 414	1 223	1 136	949	776	702
1 700												
1 800	2 397	2 159	2 065	1 927	1 701	1 613	1 591	1 376	1 278	1 067	873	790
1 900												
2 000	2 663	2 398	2 295	2 141	1 890	1 792	1 767	1 528	1 420	1 186	970	877
2 100												
2 200												
2 300												
2 400												
2 500												
2 600												
2 700												
2 800												
2 900												
3 000												

TYPE 21 K

Length [mm]	t_1 / t_2 [°C]	90 / 70			75 / 65			70 / 55			55 / 45		
	t_r [°C]	15	20	22	15	20	22	15	20	22	15	20	22
	400	687	617	590	549	483	457	451	389	360	299	244	220
	500	859	771	737	686	604	572	564	486	450	374	304	275
	600	1 031	926	884	824	725	686	677	583	540	449	365	330
	700	1 202	1 080	1 032	961	846	801	789	680	630	524	426	385
	800	1 374	1 234	1 179	1 098	966	915	902	777	720	599	487	440
	900	1 546	1 388	1 327	1 235	1 087	1 029	1 015	874	810	674	548	495
	1 000	1 718	1 543	1 474	1 373	1 208	1 144	1 128	971	901	749	609	550
	1 100												
	1 200	2 061	1 851	1 769	1 647	1 450	1 372	1 353	1 166	1 081	898	731	659
	1 300												
	1 400	2 405	2 160	2 064	1 922	1 691	1 601	1 579	1 360	1 261	1 048	852	769
	1 500												
	1 600	2 748	2 468	2 359	2 196	1 933	1 830	1 804	1 554	1 441	1 198	974	879
	1 700												
	1 800	3 092	2 777	2 653	2 471	2 174	2 059	2 030	1 749	1 621	1 348	1 096	989
	1 900												
	2 000	3 435	3 085	2 948	2 745	2 416	2 287	2 255	1 943	1 801	1 497	1 218	1 099
	2 100												
	2 200	3 779	3 394	3 243	3 020	2 658	2 516	2 481	2 137	1 981	1 647	1 339	1 209
	2 300												
	2 400	4 122	3 702	3 538	3 295	2 899	2 745	2 706	2 331	2 161	1 797	1 461	1 319
	2 500												
	2 600	4 466	4 011	3 833	3 569	3 141	2 973	2 932	2 526	2 341	1 947	1 583	1 429
	2 700												
	2 800	4 809	4 319	4 127	3 844	3 382	3 202	3 158	2 720	2 522	2 096	1 705	1 539
	2 900												
	3 000	5 153	4 628	4 422	4 118	3 624	3 431	3 383	2 914	2 702	2 246	1 827	1 649

TYPE 22 K

Length [mm]	t_1 / t_2 [°C]	90 / 70			75 / 65			70 / 55			55 / 45		
	t_r [°C]	15	20	22	15	20	22	15	20	22	15	20	22
	400	903	812	776	723	638	604	596	514	477	397	324	293
	500	1 128	1 015	970	904	797	755	745	643	596	497	405	366
	600	1 354	1 218	1 164	1 085	956	906	894	771	716	596	486	439
	700	1 580	1 421	1 358	1 266	1 116	1 057	1 042	900	835	696	567	512
	800	1 805	1 624	1 552	1 447	1 275	1 208	1 191	1 028	954	795	648	586
	900	2 031	1 827	1 746	1 628	1 435	1 359	1 340	1 157	1 073	894	729	659
	1 000	2 257	2 030	1 940	1 809	1 594	1 510	1 489	1 285	1 193	994	810	732
	1 100												
	1 200	2 708	2 435	2 328	2 170	1 913	1 812	1 787	1 542	1 431	1 192	972	879
	1 300												
	1 400	3 159	2 841	2 717	2 532	2 232	2 114	2 085	1 799	1 670	1 391	1 134	1 025
	1 500												
	1 600	3 611	3 247	3 105	2 894	2 550	2 416	2 383	2 056	1 908	1 590	1 296	1 171
	1 700												
	1 800	4 062	3 653	3 493	3 255	2 869	2 718	2 681	2 313	2 147	1 789	1 458	1 318
	1 900												
	2 000	4 513	4 059	3 881	3 617	3 188	3 020	2 979	2 570	2 385	1 987	1 620	1 464
	2 100												
	2 200	4 964	4 465	4 269	3 979	3 507	3 322	3 276	2 827	2 624	2 186	1 782	1 611
	2 300												
	2 400	5 416	4 871	4 657	4 341	3 826	3 624	3 574	3 085	2 862	2 385	1 944	1 757
	2 500												
	2 600	5 867	5 277	5 045	4 702	4 144	3 926	3 872	3 342	3 101	2 584	2 106	1 904
	2 700												
	2 800	6 318	5 683	5 433	5 064	4 463	4 228	4 170	3 599	3 339	2 782	2 268	2 050
	2 900												
	3 000	6 770	6 089	5 821	5 426	4 782	4 530	4 468	3 856	3 578	2 981	2 430	2 196

TYPE 30 K

Length [mm]	t_1 / t_2 [°C]	90 / 70			75 / 65			70 / 55			55 / 45		
	t_r [°C]	15	20	22	15	20	22	15	20	22	15	20	22
	400	768	692	662	617	545	517	510	441	410	342	280	253
	500	960	865	827	772	682	646	637	551	512	428	350	317
	600	1 152	1 038	993	926	818	775	765	661	614	513	420	380
	700	1 344	1 210	1 158	1 080	954	905	892	772	717	599	490	443
	800	1 536	1 383	1 323	1 235	1 090	1 034	1 020	882	819	685	560	507
	900	1 728	1 556	1 489	1 389	1 227	1 163	1 147	992	922	770	630	570
	1 000	1 920	1 729	1 654	1 544	1 363	1 292	1 275	1 102	1 024	856	700	633
	1 100												
	1 200	2 304	2 075	1 985	1 852	1 636	1 551	1 530	1 323	1 229	1 027	840	760
	1 300												
	1 400	2 688	2 421	2 316	2 161	1 908	1 809	1 785	1 543	1 434	1 198	980	887
	1 500												
	1 600	3 071	2 767	2 647	2 470	2 181	2 068	2 040	1 764	1 639	1 369	1 120	1 013
	1 700												
	1 800	3 455	3 113	2 978	2 778	2 453	2 326	2 295	1 984	1 843	1 540	1 259	1 140
	1 900												
	2 000	3 839	3 458	3 309	3 087	2 726	2 585	2 549	2 205	2 048	1 711	1 399	1 267
	2 100												
	2 200												
	2 300												
	2 400												
	2 500												
	2 600												
	2 700												
	2 800												
	2 900												
	3 000												

TYPE 33 K

Length [mm]	t_1 / t_2 [°C]	90 / 70			75 / 65			70 / 55			55 / 45		
	t_r [°C]	15	20	22	15	20	22	15	20	22	15	20	22
	400	1 286	1 156	1 105	1 029	906	858	846	729	676	563	458	413
	500	1 608	1 445	1 381	1 286	1 133	1 072	1 058	912	845	703	572	517
	600	1 929	1 734	1 657	1 544	1 359	1 287	1 269	1 094	1 014	844	687	620
	700	2 251	2 023	1 933	1 801	1 586	1 501	1 481	1 276	1 183	985	801	724
	800	2 572	2 312	2 209	2 058	1 812	1 716	1 692	1 458	1 352	1 125	916	827
	900	2 894	2 601	2 485	2 315	2 039	1 930	1 904	1 641	1 522	1 266	1 030	930
	1 000	3 216	2 890	2 762	2 573	2 265	2 145	2 115	1 823	1 691	1 407	1 145	1 034
	1 100												
	1 200	3 859	3 467	3 314	3 087	2 718	2 574	2 538	2 188	2 029	1 688	1 374	1 240
	1 300												
	1 400	4 502	4 045	3 866	3 602	3 171	3 003	2 961	2 552	2 367	1 969	1 603	1 447
	1 500												
	1 600	5 145	4 623	4 419	4 116	3 624	3 432	3 384	2 917	2 705	2 251	1 832	1 654
	1 700												
	1 800	5 788	5 201	4 971	4 631	4 077	3 861	3 807	3 281	3 043	2 532	2 061	1 861
	1 900												
	2 000	6 431	5 779	5 523	5 145	4 530	4 290	4 230	3 646	3 381	2 813	2 290	2 067
	2 100												
	2 200												
	2 300												
	2 400												
	2 500												
	2 600												
	2 700												
	2 800												
	2 900												
	3 000												

RADIATOR TYPES

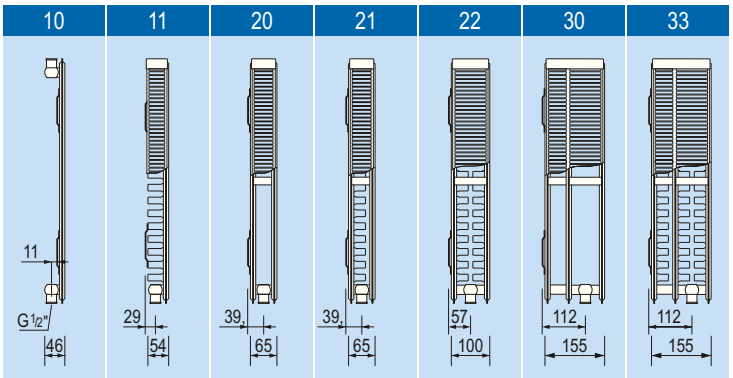

BASIC TECHNICAL DATA

	Type of radiator						
	10	11	20	21	22	30	33
M_T^K [kg.m^{-1}]	12,53	19,95	25,45	28,50	32,75	38,96	48,72
M_T^{VK} [kg.m^{-1}]	12,83	20,25	25,76	28,81	33,03	39,25	49,00
V_T [dm^3.m^{-1}]	3,10	3,10	6,10	6,10	6,10	9,20	9,20
n [-]	1,2843	1,3035	1,3186	1,3536	1,3331	1,3156	1,3444

H - radiator height
M_T^K - Kompakt radiator body weight
M_T^{VK} - Ventil Kompakt radiator body weight
V_T - water volume of radiator body
n - temperature exponent

TYPE 10 K, VK, VKS

t_1 / t_2 [°C]	90 / 70			75 / 65			70 / 55			55 / 45		
t_r [°C]	15	20	22	15	20	22	15	20	22	15	20	22
Length [mm] 400	348	314	301	281	248	236	233	202	188	157	129	117
500	435	392	376	351	311	295	291	252	234	196	161	146
600	522	471	451	421	373	354	349	302	281	236	193	175
700	609	549	526	491	435	412	407	353	328	275	226	204
800	696	628	601	561	497	471	465	403	375	314	258	234
900	783	706	676	632	559	530	523	454	422	354	290	263
1 000	870	785	751	702	621	589	581	504	469	393	322	292
1 100	957	863	827	772	683	648	640	554	516	432	354	321
1 200	1 044	942	902	842	745	707	698	605	563	471	387	351
1 300	1 131	1 020	977	912	807	766	756	655	609	511	419	380
1 400	1 218	1 099	1 052	983	869	825	814	706	656	550	451	409
1 500	1 305	1 177	1 127	1 053	932	884	872	756	703	589	483	438
1 600	1 392	1 256	1 202	1 123	994	943	930	806	750	628	516	467
1 700	1 479	1 334	1 277	1 193	1 056	1 002	988	857	797	668	548	497
1 800	1 566	1 413	1 353	1 263	1 118	1 061	1 047	907	844	707	580	526
1 900	1 653	1 491	1 428	1 334	1 180	1 120	1 105	958	891	746	612	555
2 000	1 740	1 570	1 503	1 404	1 242	1 179	1 163	1 008	938	786	644	584
2 100	1 827	1 648	1 578	1 474	1 304	1 237	1 221	1 058	984	825	677	613
2 200	1 914	1 727	1 653	1 544	1 366	1 296	1 279	1 109	1 031	864	709	643
2 300	2 001	1 805	1 728	1 614	1 428	1 355	1 337	1 159	1 078	903	741	672
2 400	2 088	1 884	1 803	1 684	1 490	1 414	1 395	1 210	1 125	943	773	701
2 500	2 175	1 962	1 879	1 755	1 553	1 473	1 454	1 260	1 172	982	806	730
2 600	2 262	2 041	1 954	1 825	1 615	1 532	1 512	1 310	1 219	1 021	838	759
2 700	2 349	2 119	2 029	1 895	1 677	1 591	1 570	1 361	1 266	1 061	870	789
2 800	2 435	2 198	2 104	1 965	1 739	1 650	1 628	1 411	1 313	1 100	902	818
2 900	2 522	2 276	2 179	2 035	1 801	1 709	1 686	1 462	1 359	1 139	934	847
3 000	2 609	2 355	2 254	2 106	1 863	1 768	1 744	1 512	1 406	1 178	967	876

TYPE 11 K, VK, VKS

t_1 / t_2 [°C]	90 / 70			75 / 65			70 / 55			55 / 45		
t_r [°C]	15	20	22	15	20	22	15	20	22	15	20	22
Length [mm] 400	541	487	466	435	384	364	359	311	289	241	197	179
500	676	609	582	543	480	455	449	388	361	302	247	223
600	811	731	699	652	576	546	539	466	433	362	296	268
700	946	852	815	761	672	637	629	544	505	422	345	313
800	1 081	974	932	870	768	728	718	621	577	482	395	357
900	1 216	1 096	1 048	978	864	819	808	699	649	543	444	402
1 000	1 351	1 218	1 165	1 087	960	910	898	777	722	603	493	447
1 100	1 487	1 339	1 281	1 196	1 056	1 001	988	854	794	663	543	491
1 200	1 622	1 461	1 398	1 304	1 152	1 092	1 077	932	866	724	592	536
1 300	1 757	1 583	1 514	1 413	1 248	1 183	1 167	1 010	938	784	641	580
1 400	1 892	1 705	1 631	1 522	1 344	1 274	1 257	1 087	1 010	844	691	625
1 500	2 027	1 826	1 747	1 630	1 440	1 365	1 347	1 165	1 082	905	740	670
1 600	2 162	1 948	1 864	1 739	1 536	1 456	1 437	1 243	1 155	965	789	714
1 700	2 297	2 070	1 980	1 848	1 632	1 547	1 526	1 320	1 227	1 025	839	759
1 800	2 433	2 192	2 097	1 957	1 728	1 638	1 616	1 398	1 299	1 085	888	804
1 900	2 568	2 313	2 213	2 065	1 824	1 729	1 706	1 476	1 371	1 146	937	848
2 000	2 703	2 435	2 330	2 174	1 920	1 821	1 796	1 553	1 443	1 206	987	893
2 100												
2 200												
2 300												
2 400												
2 500												
2 600												
2 700												
2 800												
2 900												
3 000												

TYPE 20 K, VK, VKS

t_1 / t_2 [°C]	90 / 70			75 / 65			70 / 55			55 / 45		
t_r [°C]	15	20	22	15	20	22	15	20	22	15	20	22
Length [mm] 400	575	518	496	462	408	387	382	330	306	256	209	189
500	719	647	619	578	510	483	477	412	383	320	261	236
600	863	777	743	693	612	580	572	495	459	384	314	284
700	1 007	906	867	809	714	677	668	577	536	448	366	331
800	1 150	1 036	991	924	816	774	763	660	613	512	418	378
900	1 294	1 165	1 115	1 040	918	870	858	742	689	575	470	426
1 000	1 438	1 295	1 239	1 156	1 020	967	954	825	766	639	523	473
1 100	1 582	1 424	1 363	1 271	1 122	1 064	1 049	907	842	703	575	520
1 200	1 726	1 554	1 487	1 387	1 224	1 160	1 145	989	919	767	627	567
1 300	1 869	1 683	1 610	1 502	1 326	1 257	1 240	1 072	995	831	679	615
1 400	2 013	1 813	1 734	1 618	1 428	1 354	1 335	1 154	1 072	895	732	662
1 500	2 157	1 942	1 858	1 733	1 530	1 450	1 431	1 237	1 149	959	784	709
1 600	2 301	2 072	1 982	1 849	1 632	1 547	1 526	1 319	1 225	1 023	836	757
1 700	2 445	2 201	2 106	1 964	1 734	1 644	1 621	1 402	1 302	1 087	888	804
1 800	2 588	2 331	2 230	2 080	1 836	1 740	1 717	1 484	1 378	1 151	941	851
1 900	2 732	2 460	2 354	2 196	1 938	1 837	1 812	1 567	1 455	1 215	993	898
2 000	2 876	2 590	2 478	2 311	2 040	1 934	1 908	1 649	1 532	1 279	1 045	946
2 100	3 020	2 719	2 601	2 427	2 142	2 031	2 003	1 731	1 608	1 343	1 097	993
2 200	3 164	2 849	2 725	2 542	2 244	2 127	2 098	1 814	1 685	1 407	1 150	1 040
2 300	3 308	2 978	2 849	2 658	2 346	2 224	2 194	1 896	1 761	1 471	1 202	1 088
2 400	3 451	3 108	2 973	2 773	2 448	2 321	2 289	1 979	1 838	1 535	1 254	1 135
2 500	3 595	3 237	3 097	2 889	2 550	2 417	2 384	2 061	1 914	1 599	1 306	1 182
2 600	3 739	3 367	3 221	3 004	2 652	2 514	2 480	2 144	1 991	1 663	1 359	1 229
2 700	3 883	3 496	3 345	3 120	2 754	2 611	2 575	2 226	2 068	1 726	1 411	1 277
2 800	4 027	3 626	3 469	3 236	2 856	2 707	2 671	2 309	2 144	1 790	1 463	1 324
2 900	4 170	3 755	3 592	3 351	2 958	2 804	2 766	2 391	2 221	1 854	1 515	1 371
3 000	4 314	3 885	3 716	3 467	3 060	2 901	2 861	2 474	2 297	1 918	1 568	1 418

TYPE 21 K, VK, VKS

Length [mm]	t_1 / t_2 [°C]	90 / 70			75 / 65			70 / 55			55 / 45		
	t_r [°C]	15	20	22	15	20	22	15	20	22	15	20	22
400		734	659	629	586	515	487	480	413	383	318	258	232
500		918	824	787	732	644	609	600	516	478	397	322	291
600		1 101	988	944	879	772	731	720	620	574	476	387	349
700		1 285	1 153	1 101	1 025	901	852	840	723	670	556	451	407
800		1 469	1 318	1 259	1 171	1 030	974	961	826	765	635	516	465
900		1 652	1 483	1 416	1 318	1 158	1 096	1 081	930	861	715	580	523
1 000		1 836	1 647	1 573	1 464	1 287	1 218	1 201	1 033	957	794	645	581
1 100		2 019	1 812	1 731	1 611	1 416	1 340	1 321	1 136	1 053	874	709	639
1 200		2 203	1 977	1 888	1 757	1 544	1 461	1 441	1 239	1 148	953	774	697
1 300		2 386	2 141	2 045	1 903	1 673	1 583	1 561	1 343	1 244	1 032	838	756
1 400		2 570	2 306	2 203	2 050	1 802	1 705	1 681	1 446	1 340	1 112	902	814
1 500		2 754	2 471	2 360	2 196	1 931	1 827	1 801	1 549	1 435	1 191	967	872
1 600		2 937	2 636	2 517	2 343	2 059	1 949	1 921	1 653	1 531	1 271	1 031	930
1 700		3 121	2 800	2 675	2 489	2 188	2 070	2 041	1 756	1 627	1 350	1 096	988
1 800		3 304	2 965	2 832	2 636	2 317	2 192	2 161	1 859	1 722	1 429	1 160	1 046
1 900		3 488	3 130	2 989	2 782	2 445	2 314	2 281	1 962	1 818	1 509	1 225	1 104
2 000		3 671	3 294	3 147	2 928	2 574	2 436	2 401	2 066	1 914	1 588	1 289	1 162
2 100		3 855	3 459	3 304	3 075	2 703	2 557	2 521	2 169	2 009	1 668	1 354	1 221
2 200		4 039	3 624	3 461	3 221	2 831	2 679	2 641	2 272	2 105	1 747	1 418	1 279
2 300		4 222	3 789	3 619	3 368	2 960	2 801	2 762	2 376	2 201	1 827	1 483	1 337
2 400		4 406	3 953	3 776	3 514	3 089	2 923	2 882	2 479	2 296	1 906	1 547	1 395
2 500		4 589	4 118	3 933	3 661	3 218	3 045	3 002	2 582	2 392	1 985	1 611	1 453
2 600		4 773	4 283	4 091	3 807	3 346	3 166	3 122	2 685	2 488	2 065	1 676	1 511
2 700		4 957	4 448	4 248	3 953	3 475	3 288	3 242	2 789	2 584	2 144	1 740	1 569
2 800		5 140	4 612	4 405	4 100	3 604	3 410	3 362	2 892	2 679	2 224	1 805	1 627
2 900		5 324	4 777	4 563	4 246	3 732	3 532	3 482	2 995	2 775	2 303	1 869	1 686
3 000		5 507	4 942	4 720	4 393	3 861	3 653	3 602	3 099	2 871	2 382	1 934	1 744

TYPE 22 K, VK, VKS

Length [mm]	t_1 / t_2 [°C]	90 / 70			75 / 65			70 / 55			55 / 45		
	t_r [°C]	15	20	22	15	20	22	15	20	22	15	20	22
400		964	866	828	771	679	643	634	547	507	422	344	310
500		1 204	1 083	1 035	964	849	804	793	684	634	528	430	388
600		1 445	1 299	1 242	1 157	1 019	965	951	820	761	633	516	466
700		1 686	1 516	1 449	1 350	1 189	1 126	1 110	957	888	739	602	543
800		1 927	1 732	1 656	1 542	1 358	1 286	1 269	1 094	1 014	844	688	621
900		2 168	1 949	1 863	1 735	1 528	1 447	1 427	1 231	1 141	950	773	699
1 000		2 409	2 165	2 070	1 928	1 698	1 608	1 586	1 367	1 268	1 055	859	776
1 100		2 650	2 382	2 276	2 121	1 868	1 769	1 744	1 504	1 395	1 161	945	854
1 200		2 891	2 598	2 483	2 314	2 038	1 930	1 903	1 641	1 522	1 267	1 031	931
1 300		3 132	2 815	2 690	2 506	2 207	2 090	2 062	1 777	1 649	1 372	1 117	1 009
1 400		3 373	3 031	2 897	2 699	2 377	2 251	2 220	1 914	1 775	1 478	1 203	1 087
1 500		3 613	3 248	3 104	2 892	2 547	2 412	2 379	2 051	1 902	1 583	1 289	1 164
1 600		3 854	3 464	3 311	3 085	2 717	2 573	2 537	2 188	2 029	1 689	1 375	1 242
1 700		4 095	3 681	3 518	3 278	2 887	2 734	2 696	2 324	2 156	1 794	1 461	1 319
1 800		4 336	3 897	3 725	3 470	3 056	2 895	2 854	2 461	2 283	1 900	1 547	1 397
1 900		4 577	4 114	3 932	3 663	3 226	3 055	3 013	2 598	2 409	2 005	1 633	1 475
2 000		4 818	4 330	4 139	3 856	3 396	3 216	3 172	2 734	2 536	2 111	1 719	1 552
2 100		5 059	4 547	4 346	4 049	3 566	3 377	3 330	2 871	2 663	2 216	1 805	1 630
2 200		5 300	4 763	4 553	4 242	3 736	3 538	3 489	3 008	2 790	2 322	1 891	1 708
2 300		5 541	4 980	4 760	4 435	3 905	3 699	3 647	3 145	2 917	2 428	1 977	1 785
2 400		5 782	5 196	4 967	4 627	4 075	3 859	3 806	3 281	3 043	2 533	2 063	1 863
2 500		6 022	5 413	5 174	4 820	4 245	4 020	3 964	3 418	3 170	2 639	2 148	1 940
2 600		6 263	5 629	5 381	5 013	4 415	4 181	4 123	3 555	3 297	2 744	2 234	2 018
2 700		6 504	5 846	5 588	5 206	4 585	4 342	4 282	3 692	3 424	2 850	2 320	2 096
2 800		6 745	6 063	5 795	5 399	4 754	4 503	4 440	3 828	3 551	2 955	2 406	2 173
2 900		6 986	6 279	6 002	5 591	4 924	4 663	4 599	3 965	3 678	3 061	2 492	2 251
3 000		7 227	6 496	6 209	5 784	5 094	4 824	4 757	4 102	3 804	3 166	2 578	2 328

TYPE 30 K, VK, VKS

Length [mm]	t_1 / t_2 [°C]	90 / 70			75 / 65			70 / 55			55 / 45		
	t_r [°C]	15	20	22	15	20	22	15	20	22	15	20	22
400		822	740	707	660	582	552	544	470	436	364	297	269
500		1 027	925	884	825	728	689	680	587	545	455	372	336
600		1 233	1 110	1 061	990	873	827	816	705	654	546	446	403
700		1 438	1 295	1 238	1 155	1 019	965	952	822	764	637	520	470
800		1 644	1 480	1 415	1 319	1 164	1 103	1 088	940	873	728	594	538
900		1 849	1 664	1 592	1 484	1 310	1 241	1 224	1 057	982	819	669	605
1 000		2 055	1 849	1 769	1 649	1 455	1 379	1 360	1 175	1 091	910	743	672
1 100		2 260	2 034	1 946	1 814	1 601	1 517	1 496	1 292	1 200	1 001	817	739
1 200		2 466	2 219	2 122	1 979	1 746	1 655	1 632	1 410	1 309	1 092	892	806
1 300		2 671	2 404	2 299	2 144	1 892	1 793	1 768	1 527	1 418	1 183	966	874
1 400		2 877	2 589	2 476	2 309	2 037	1 930	1 904	1 645	1 527	1 274	1 040	941
1 500		3 082	2 774	2 653	2 474	2 183	2 068	2 040	1 762	1 636	1 365	1 115	1 008
1 600		3 288	2 959	2 830	2 639	2 328	2 206	2 176	1 880	1 745	1 456	1 189	1 075
1 700		3 493	3 144	3 007	2 804	2 474	2 344	2 312	1 997	1 854	1 547	1 263	1 142
1 800		3 699	3 329	3 184	2 969	2 619	2 482	2 448	2 115	1 963	1 638	1 337	1 209
1 900		3 904	3 514	3 361	3 134	2 765	2 620	2 584	2 232	2 073	1 729	1 412	1 277
2 000		4 110	3 699	3 537	3 299	2 910	2 758	2 720	2 350	2 182	1 820	1 486	1 344
2 100		4 315	3 884	3 714	3 464	3 056	2 896	2 856	2 467	2 291	1 911	1 560	1 411
2 200		4 521	4 069	3 891	3 629	3 201	3 034	2 992	2 585	2 400	2 002	1 635	1 478
2 300		4 726	4 254	4 068	3 794	3 347	3 172	3 128	2 702	2 509	2 093	1 709	1 545
2 400		4 931	4 439	4 245	3 958	3 492	3 309	3 264	2 820	2 618	2 184	1 783	1 613
2 500		5 137	4 624	4 422	4 123	3 638	3 447	3 400	2 937	2 727	2 275	1 858	1 680
2 600		5 342	4 808	4 599	4 288	3 783	3 585	3 536	3 055	2 836	2 366	1 932	1 747
2 700		5 548	4 993	4 776	4 453	3 929	3 723	3 672	3 172	2 945	2 457	2 006	1 814
2 800		5 753	5 178	4 952	4 618	4 074	3 861	3 808	3 290	3 054	2 548	2 080	1 881
2 900		5 959	5 363	5 129	4 783	4 220	3 999	3 944	3 407	3 163	2 639	2 155	1 949
3 000		6 164	5 548	5 306	4 948	4 365	4 137	4 080	3 525	3 272	2 730	2 229	2 016

TYPE 33 K, VK, VKS

Length [mm]	t_1 / t_2 [°C]	90 / 70			75 / 65			70 / 55			55 / 45		
	t_r [°C]	15	20	22	15	20	22	15	20	22	15	20	22
400		1 372	1 232	1 177	1 096	964	913	900	775	718	597	485	438
500		1 715	1 540	1 471	1 370	1 205	1 141	1 125	968	898	746	606	547
600		2 058	1 848	1 765	1 644	1 446	1 369	1 350	1 162	1 077	895	728	657
700		2 400	2 156	2 060	1 918	1 687	1 597	1 575	1 356	1 257	1 044	849	766
800		2 743	2 464	2 354	2 192	1 928	1 825	1 800	1 550	1 436	1 194	970	875
900		3 086	2 771	2 648	2 466	2 169	2 053	2 024	1 743	1 616	1 343	1 091	985
1 000		3 429	3 079	2 942	2 739	2 410	2 281	2 249	1 937	1 795	1 492	1 213	1 094
1 100		3 772	3 387	3 236	3 013	2 651	2 509	2 474	2 131	1 975	1 641	1 334	1 204
1 200		4 115	3 695	3 531	3 287	2 892	2 738	2 699	2 324	2 154	1 790	1 455	1 313
1 300		4 458	4 003	3 825	3 561	3 133	2 966	2 924	2 518	2 334	1 940	1 577	1 423
1 400		4 801	4 311	4 119	3 835	3 374	3 194	3 149	2 712	2 514	2 089	1 698	1 532
1 500		5 144	4 619	4 413	4 109	3 615	3 422	3 374	2 905	2 693	2 238	1 819	1 641
1 600		5 487	4 927	4 708	4 383	3 856	3 650	3 599	3 099	2 873	2 387	1 940	1 751
1 700		5 830	5 235	5 002	4 657	4 097	3 878	3 824	3 293	3 052	2 536	2 062	1 860
1 800		6 173	5 543	5 296	4 931	4 338	4 106	4 049	3 487	3 232	2 686	2 183	1 970
1 900		6 516	5 851	5 590	5 205	4 579	4 334	4 274	3 680	3 411	2 835	2 304	2 079
2 000		6 859	6 159	5 884	5 479	4 820	4 563	4 499	3 874	3 591	2 984	2 425	2 189
2 100		7 201	6 467	6 179	5 753	5 061	4 791	4 724	4 068	3 770	3 133	2 547	2 298
2 200		7 544	6 775	6 473	6 027	5 302	5 019	4 949	4 261	3 950	3 282	2 668	2 407
2 300		7 887	7 083	6 767	6 301	5 543	5 247	5 174	4 455	4 129	3 432	2 789	2 517
2 400		8 230	7 391	7 061	6 575	5 784	5 475	5 399	4 649	4 309	3 581	2 911	2 626
2 500		8 573	7 699	7 356	6 849	6 025	5 703	5 624	4 842	4 489	3 730	3 032	2 736
2 600		8 916	8 006	7 650	7 123	6 266	5 931	5 848	5 036	4 668	3 879	3 153	2 845
2 700		9 259	8 314	7 944	7 397	6 507	6 160	6 073	5 230	4 848	4 028	3 274	2 955
2 800		9 602	8 622	8 238	7 670	6 748	6 388	6 298	5 424	5 027	4 178	3 396	3 064
2 900		9 945	8 930	8 532	7 944	6 989	6 616	6 523	5 617	5 207	4 327	3 517	3 174
3 000		10 288	9 238	8 827	8 218	7 230	6 844	6 748	5 811	5 386	4 476	3 638	3 283

RADIATOR TYPES

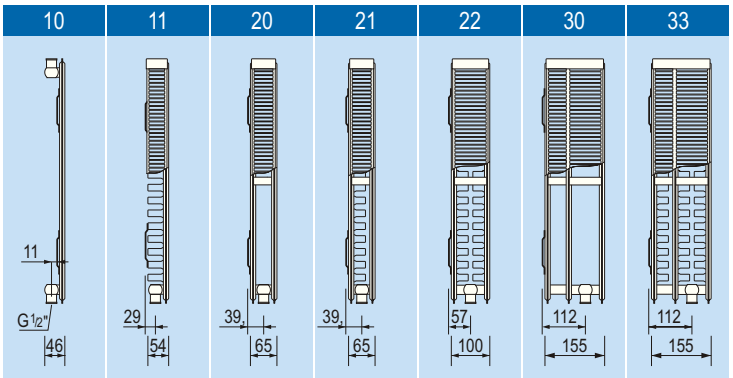

BASIC TECHNICAL DATA

	Type of radiator						
	10	11	20	21	22	30	33
M_T^K [kg.m^{-1}]	18,32	29,47	37,54	42,59	48,30	56,34	73,37
M_T^{VK} [kg.m^{-1}]	18,70	29,85	37,95	43,00	48,68	56,72	73,75
V_T [dm^3.m^{-1}]	4,30	4,30	8,70	8,70	8,70	13,00	13,00
n [-]	1,3216	1,3237	1,3152	1,3507	1,3348	1,3192	1,3580

H - radiator height
M_T^K - Kompakt radiator body weight
M_T^{VK} - Ventil Kompakt radiator body weight
V_T - water volume of radiator body
n - temperature exponent

TYPE 10 K, VK, VKS

t_1 / t_2 [°C]	90 / 70			75 / 65			70 / 55			55 / 45		
t_r [°C]	15	20	22	15	20	22	15	20	22	15	20	22
Length [mm] 400	469	422	403	376	332	314	310	268	248	207	169	153
500	586	527	504	470	415	393	387	334	310	259	211	191
600	704	633	605	564	497	471	465	401	372	310	253	229
700	821	738	706	658	580	550	542	468	434	362	295	267
800	938	844	807	752	663	628	620	535	497	414	338	305
900	1 055	949	908	846	746	707	697	602	559	466	380	343
1 000	1 173	1 055	1 009	940	829	785	775	669	621	517	422	382
1 100	1 290	1 160	1 110	1 034	912	864	852	736	683	569	464	420
1 200	1 407	1 266	1 210	1 128	995	943	930	803	745	621	506	458
1 300	1 524	1 371	1 311	1 222	1 078	1 021	1 007	869	807	673	549	496
1 400	1 642	1 477	1 412	1 316	1 161	1 100	1 085	936	869	724	591	534
1 500	1 759	1 582	1 513	1 410	1 244	1 178	1 162	1 003	931	776	633	572
1 600	1 876	1 688	1 614	1 504	1 326	1 257	1 239	1 070	993	828	675	610
1 700	1 993	1 793	1 715	1 598	1 409	1 335	1 317	1 137	1 055	880	717	649
1 800	2 111	1 899	1 816	1 693	1 492	1 414	1 394	1 204	1 117	931	760	687
1 900	2 228	2 004	1 916	1 787	1 575	1 492	1 472	1 271	1 179	983	802	725
2 000	2 345	2 110	2 017	1 881	1 658	1 571	1 549	1 338	1 241	1 035	844	763
2 100	2 462	2 215	2 118	1 975	1 741	1 649	1 627	1 404	1 303	1 087	886	801
2 200	2 580	2 321	2 219	2 069	1 824	1 728	1 704	1 471	1 366	1 138	928	839
2 300	2 697	2 426	2 320	2 163	1 907	1 807	1 782	1 538	1 428	1 190	971	877
2 400	2 814	2 532	2 421	2 257	1 990	1 885	1 859	1 605	1 490	1 242	1 013	916
2 500	2 931	2 637	2 522	2 351	2 073	1 964	1 937	1 672	1 552	1 294	1 055	954
2 600	3 049	2 743	2 623	2 445	2 155	2 042	2 014	1 739	1 614	1 345	1 097	992
2 700	3 166	2 848	2 723	2 539	2 238	2 121	2 092	1 806	1 676	1 397	1 140	1 030
2 800	3 283	2 954	2 824	2 633	2 321	2 199	2 169	1 873	1 738	1 449	1 182	1 068
2 900	3 400	3 059	2 925	2 727	2 404	2 278	2 247	1 939	1 800	1 500	1 224	1 106
3 000	3 518	3 165	3 026	2 821	2 487	2 356	2 324	2 006	1 862	1 552	1 266	1 145

TYPE 11 K, VK, VKS

t_1 / t_2 [°C]	90 / 70			75 / 65			70 / 55			55 / 45		
t_r [°C]	15	20	22	15	20	22	15	20	22	15	20	22
Length [mm] 400	761	685	655	610	538	510	503	434	403	336	274	247
500	952	856	818	763	673	637	628	542	503	419	342	309
600	1 142	1 027	982	916	807	765	754	651	604	503	410	371
700	1 332	1 198	1 146	1 068	942	892	880	759	705	587	479	433
800	1 523	1 370	1 310	1 221	1 076	1 019	1 005	868	805	671	547	495
900	1 713	1 541	1 473	1 373	1 211	1 147	1 131	976	906	755	616	556
1 000	1 903	1 712	1 637	1 526	1 345	1 274	1 257	1 085	1 007	839	684	618
1 100	2 094	1 883	1 801	1 678	1 480	1 402	1 382	1 193	1 107	923	752	680
1 200	2 284	2 055	1 964	1 831	1 614	1 529	1 508	1 302	1 208	1 007	821	742
1 300	2 475	2 226	2 128	1 984	1 749	1 657	1 634	1 410	1 309	1 090	889	804
1 400	2 665	2 397	2 292	2 136	1 883	1 784	1 759	1 519	1 409	1 174	958	865
1 500	2 855	2 568	2 455	2 289	2 018	1 911	1 885	1 627	1 510	1 258	1 026	927
1 600	3 046	2 739	2 619	2 441	2 152	2 039	2 011	1 735	1 610	1 342	1 094	989
1 700	3 236	2 911	2 783	2 594	2 287	2 166	2 136	1 844	1 711	1 426	1 163	1 051
1 800	3 426	3 082	2 947	2 747	2 421	2 294	2 262	1 952	1 812	1 510	1 231	1 113
1 900	3 617	3 253	3 110	2 899	2 556	2 421	2 388	2 061	1 912	1 594	1 300	1 175
2 000	3 807	3 424	3 274	3 052	2 690	2 549	2 513	2 169	2 013	1 678	1 368	1 236
2 100												
2 200												
2 300												
2 400												
2 500												
2 600												
2 700												
2 800												
2 900												
3 000												

TYPE 20 K, VK, VKS

t_1 / t_2 [°C]	90 / 70			75 / 65			70 / 55			55 / 45		
t_r [°C]	15	20	22	15	20	22	15	20	22	15	20	22
Length [mm] 400	827	744	712	664	585	555	547	472	438	366	298	270
500	1 034	930	890	829	732	693	684	590	548	457	373	337
600	1 241	1 116	1 068	995	878	832	820	708	658	548	448	405
700	1 447	1 302	1 245	1 161	1 024	970	957	827	767	640	522	472
800	1 654	1 488	1 423	1 327	1 170	1 109	1 094	945	877	731	597	540
900	1 861	1 675	1 601	1 493	1 317	1 248	1 231	1 063	986	823	671	607
1 000	2 068	1 861	1 779	1 659	1 463	1 386	1 367	1 181	1 096	914	746	674
1 100	2 274	2 047	1 957	1 825	1 609	1 525	1 504	1 299	1 206	1 006	821	742
1 200	2 481	2 233	2 135	1 991	1 756	1 664	1 641	1 417	1 315	1 097	895	809
1 300	2 688	2 419	2 313	2 157	1 902	1 802	1 778	1 535	1 425	1 188	970	877
1 400	2 895	2 605	2 491	2 322	2 048	1 941	1 914	1 653	1 535	1 280	1 044	944
1 500	3 101	2 791	2 669	2 488	2 195	2 080	2 051	1 771	1 644	1 371	1 119	1 012
1 600	3 308	2 977	2 847	2 654	2 341	2 218	2 188	1 889	1 754	1 463	1 194	1 079
1 700	3 515	3 163	3 025	2 820	2 487	2 357	2 324	2 007	1 863	1 554	1 268	1 147
1 800	3 722	3 349	3 203	2 986	2 633	2 495	2 461	2 125	1 973	1 645	1 343	1 214
1 900	3 929	3 535	3 381	3 152	2 780	2 634	2 598	2 244	2 083	1 737	1 417	1 282
2 000	4 135	3 721	3 558	3 318	2 926	2 773	2 735	2 362	2 192	1 828	1 492	1 349
2 100	4 342	3 907	3 736	3 484	3 072	2 911	2 871	2 480	2 302	1 920	1 567	1 416
2 200	4 549	4 093	3 914	3 650	3 219	3 050	3 008	2 598	2 411	2 011	1 641	1 484
2 300	4 756	4 279	4 092	3 815	3 365	3 189	3 145	2 716	2 521	2 102	1 716	1 551
2 400	4 962	4 465	4 270	3 981	3 511	3 327	3 282	2 834	2 631	2 194	1 790	1 619
2 500	5 169	4 651	4 448	4 147	3 658	3 466	3 418	2 952	2 740	2 285	1 865	1 686
2 600	5 376	4 837	4 626	4 313	3 804	3 604	3 555	3 070	2 850	2 377	1 940	1 754
2 700	5 583	5 024	4 804	4 479	3 950	3 743	3 692	3 188	2 959	2 468	2 014	1 821
2 800	5 789	5 210	4 982	4 645	4 096	3 882	3 829	3 306	3 069	2 560	2 089	1 889
2 900	5 996	5 396	5 160	4 811	4 243	4 020	3 965	3 424	3 179	2 651	2 163	1 956
3 000	6 203	5 582	5 338	4 977	4 389	4 159	4 102	3 542	3 288	2 742	2 238	2 023

TYPE 21 K, VK, VKS

t_1 / t_2 [°C]	90 / 70			75 / 65			70 / 55			55 / 45		
t_r [°C]	15	20	22	15	20	22	15	20	22	15	20	22
Length [mm]												
400	1 019	915	874	813	715	677	667	574	532	442	359	324
500	1 274	1 144	1 092	1 017	894	846	834	718	665	552	448	404
600	1 529	1 372	1 311	1 220	1 073	1 015	1 001	861	798	663	538	485
700	1 784	1 601	1 529	1 424	1 252	1 184	1 168	1 005	931	773	628	566
800	2 039	1 830	1 748	1 627	1 430	1 354	1 335	1 148	1 064	884	717	647
900	2 294	2 059	1 966	1 830	1 609	1 523	1 501	1 292	1 197	994	807	728
1 000	2 548	2 287	2 185	2 034	1 788	1 692	1 668	1 436	1 330	1 104	897	809
1 100	2 803	2 516	2 403	2 237	1 967	1 861	1 835	1 579	1 463	1 215	987	890
1 200	3 058	2 745	2 622	2 440	2 146	2 030	2 002	1 723	1 596	1 325	1 076	971
1 300	3 313	2 973	2 840	2 644	2 324	2 200	2 169	1 866	1 729	1 436	1 166	1 052
1 400	3 568	3 202	3 059	2 847	2 503	2 369	2 336	2 010	1 862	1 546	1 256	1 132
1 500	3 823	3 431	3 277	3 050	2 682	2 538	2 502	2 153	1 995	1 657	1 345	1 213
1 600	4 077	3 660	3 496	3 254	2 861	2 707	2 669	2 297	2 128	1 767	1 435	1 294
1 700	4 332	3 888	3 714	3 457	3 040	2 877	2 836	2 441	2 261	1 878	1 525	1 375
1 800	4 587	4 117	3 933	3 661	3 218	3 046	3 003	2 584	2 394	1 988	1 614	1 456
1 900	4 842	4 346	4 151	3 864	3 397	3 215	3 170	2 728	2 527	2 098	1 704	1 537
2 000	5 097	4 575	4 370	4 067	3 576	3 384	3 337	2 871	2 660	2 209	1 794	1 618
2 100	5 352	4 803	4 588	4 271	3 755	3 553	3 503	3 015	2 793	2 319	1 883	1 699
2 200	5 607	5 032	4 807	4 474	3 934	3 723	3 670	3 158	2 926	2 430	1 973	1 780
2 300	5 861	5 261	5 025	4 677	4 112	3 892	3 837	3 302	3 059	2 540	2 063	1 860
2 400	6 116	5 489	5 244	4 881	4 291	4 061	4 004	3 445	3 192	2 651	2 152	1 941
2 500	6 371	5 718	5 462	5 084	4 470	4 230	4 171	3 589	3 325	2 761	2 242	2 022
2 600	6 626	5 947	5 681	5 287	4 649	4 399	4 338	3 733	3 459	2 872	2 332	2 103
2 700	6 881	6 176	5 899	5 491	4 828	4 569	4 504	3 876	3 592	2 982	2 421	2 184
2 800	7 136	6 404	6 118	5 694	5 006	4 738	4 671	4 020	3 725	3 092	2 511	2 265
2 900	7 390	6 633	6 336	5 898	5 185	4 907	4 838	4 163	3 858	3 203	2 601	2 346
3 000	7 645	6 862	6 555	6 101	5 364	5 076	5 005	4 307	3 991	3 313	2 691	2 427

TYPE 22 K, VK, VKS

t_1 / t_2 [°C]	90 / 70			75 / 65			70 / 55			55 / 45		
t_r [°C]	15	20	22	15	20	22	15	20	22	15	20	22
Length [mm]												
400	1 333	1 198	1 145	1 067	939	889	877	756	701	583	475	429
500	1 666	1 497	1 431	1 333	1 174	1 112	1 096	945	876	729	594	536
600	2 000	1 797	1 717	1 600	1 409	1 334	1 316	1 134	1 052	875	712	643
700	2 333	2 096	2 004	1 867	1 644	1 556	1 535	1 323	1 227	1 021	831	751
800	2 666	2 396	2 290	2 133	1 878	1 779	1 754	1 512	1 402	1 167	950	858
900	2 999	2 695	2 576	2 400	2 113	2 001	1 973	1 701	1 578	1 313	1 069	965
1 000	3 333	2 995	2 862	2 667	2 348	2 223	2 193	1 890	1 753	1 459	1 187	1 072
1 100	3 666	3 294	3 149	2 933	2 583	2 446	2 412	2 079	1 928	1 604	1 306	1 179
1 200	3 999	3 594	3 435	3 200	2 818	2 668	2 631	2 268	2 103	1 750	1 425	1 287
1 300	4 332	3 893	3 721	3 467	3 052	2 891	2 850	2 457	2 279	1 896	1 544	1 394
1 400	4 666	4 193	4 007	3 733	3 287	3 113	3 070	2 646	2 454	2 042	1 662	1 501
1 500	4 999	4 492	4 294	4 000	3 522	3 335	3 289	2 835	2 629	2 188	1 781	1 608
1 600	5 332	4 792	4 580	4 266	3 757	3 558	3 508	3 024	2 805	2 334	1 900	1 716
1 700	5 666	5 091	4 866	4 533	3 992	3 780	3 727	3 213	2 980	2 480	2 018	1 823
1 800	5 999	5 391	5 152	4 800	4 226	4 002	3 947	3 402	3 155	2 625	2 137	1 930
1 900	6 332	5 690	5 439	5 066	4 461	4 225	4 166	3 591	3 331	2 771	2 256	2 037
2 000	6 665	5 990	5 725	5 333	4 696	4 447	4 385	3 780	3 506	2 917	2 375	2 144
2 100	6 999	6 289	6 011	5 600	4 931	4 669	4 605	3 969	3 681	3 063	2 493	2 252
2 200	7 332	6 589	6 297	5 866	5 166	4 892	4 824	4 158	3 856	3 209	2 612	2 359
2 300	7 665	6 888	6 584	6 133	5 400	5 114	5 043	4 347	4 032	3 355	2 731	2 466
2 400	7 998	7 188	6 870	6 400	5 635	5 336	5 262	4 536	4 207	3 501	2 850	2 573
2 500	8 332	7 487	7 156	6 666	5 870	5 559	5 482	4 725	4 382	3 646	2 968	2 680
2 600	8 665	7 787	7 442	6 933	6 105	5 781	5 701	4 914	4 558	3 792	3 087	2 788
2 700	8 998	8 086	7 729	7 200	6 340	6 003	5 920	5 103	4 733	3 938	3 206	2 895
2 800	9 331	8 386	8 015	7 466	6 574	6 226	6 139	5 292	4 908	4 084	3 325	3 002
2 900	9 665	8 685	8 301	7 733	6 809	6 448	6 359	5 481	5 083	4 230	3 443	3 109
3 000	9 998	8 985	8 587	8 000	7 044	6 670	6 578	5 670	5 259	4 376	3 562	3 217

TYPE 30 K, VK, VKS

t_1 / t_2 [°C]	90 / 70			75 / 65			70 / 55			55 / 45		
t_r [°C]	15	20	22	15	20	22	15	20	22	15	20	22
Length [mm]												
400	1 153	1 038	992	925	816	773	763	659	611	510	416	376
500	1 442	1 297	1 241	1 157	1 020	967	953	823	764	637	520	470
600	1 730	1 557	1 489	1 388	1 224	1 160	1 144	988	917	765	624	564
700	2 019	1 816	1 737	1 619	1 428	1 353	1 335	1 152	1 070	892	728	658
800	2 307	2 076	1 985	1 851	1 632	1 546	1 525	1 317	1 223	1 019	832	752
900	2 595	2 335	2 233	2 082	1 836	1 740	1 716	1 482	1 375	1 147	936	846
1 000	2 884	2 595	2 481	2 313	2 040	1 933	1 907	1 646	1 528	1 274	1 040	940
1 100	3 172	2 854	2 729	2 545	2 244	2 126	2 097	1 811	1 681	1 402	1 144	1 034
1 200	3 460	3 114	2 977	2 776	2 448	2 320	2 288	1 976	1 834	1 529	1 248	1 128
1 300	3 749	3 373	3 226	3 007	2 652	2 513	2 478	2 140	1 987	1 657	1 352	1 222
1 400	4 037	3 633	3 474	3 239	2 856	2 706	2 669	2 305	2 139	1 784	1 456	1 316
1 500	4 325	3 892	3 722	3 470	3 060	2 900	2 860	2 470	2 292	1 912	1 560	1 410
1 600	4 614	4 152	3 970	3 701	3 264	3 093	3 050	2 634	2 445	2 039	1 664	1 504
1 700	4 902	4 411	4 218	3 933	3 468	3 286	3 241	2 799	2 598	2 166	1 768	1 598
1 800	5 191	4 670	4 466	4 164	3 672	3 479	3 432	2 963	2 751	2 294	1 872	1 692
1 900	5 479	4 930	4 714	4 395	3 876	3 673	3 622	3 128	2 904	2 421	1 976	1 786
2 000	5 767	5 189	4 962	4 627	4 080	3 866	3 813	3 293	3 056	2 549	2 080	1 880
2 100	6 056	5 449	5 211	4 858	4 284	4 059	4 004	3 457	3 209	2 676	2 184	1 974
2 200	6 344	5 708	5 459	5 089	4 488	4 253	4 194	3 622	3 362	2 804	2 288	2 068
2 300	6 632	5 968	5 707	5 321	4 692	4 446	4 385	3 787	3 515	2 931	2 392	2 162
2 400	6 921	6 227	5 955	5 552	4 896	4 639	4 576	3 951	3 668	3 058	2 496	2 256
2 500	7 209	6 487	6 203	5 783	5 100	4 833	4 766	4 116	3 820	3 186	2 600	2 350
2 600	7 498	6 746	6 451	6 015	5 304	5 026	4 957	4 280	3 973	3 313	2 704	2 444
2 700	7 786	7 006	6 699	6 246	5 508	5 219	5 148	4 445	4 126	3 441	2 808	2 538
2 800	8 074	7 265	6 947	6 477	5 712	5 413	5 338	4 610	4 279	3 568	2 912	2 632
2 900	8 363	7 525	7 196	6 709	5 916	5 606	5 529	4 774	4 432	3 696	3 016	2 726
3 000	8 651	7 784	7 444	6 940	6 120	5 799	5 720	4 939	4 585	3 823	3 120	2 820

TYPE 33 K, VK, VKS

t_1 / t_2 [°C]	90 / 70			75 / 65			70 / 55			55 / 45		
t_r [°C]	15	20	22	15	20	22	15	20	22	15	20	22
Length [mm]												
400	1 866	1 674	1 599	1 487	1 307	1 236	1 219	1 048	971	805	653	589
500	2 333	2 092	1 998	1 859	1 634	1 545	1 524	1 310	1 213	1 006	816	736
600	2 799	2 511	2 398	2 231	1 960	1 854	1 828	1 572	1 456	1 208	980	883
700	3 266	2 929	2 798	2 603	2 287	2 164	2 133	1 834	1 699	1 409	1 143	1 030
800	3 732	3 348	3 197	2 975	2 614	2 473	2 438	2 096	1 941	1 610	1 306	1 177
900	4 199	3 766	3 597	3 347	2 940	2 782	2 742	2 358	2 184	1 811	1 469	1 324
1 000	4 665	4 185	3 997	3 718	3 267	3 091	3 047	2 620	2 427	2 013	1 633	1 472
1 100	5 132	4 603	4 396	4 090	3 594	3 400	3 352	2 882	2 669	2 214	1 796	1 619
1 200	5 598	5 022	4 796	4 462	3 920	3 709	3 657	3 144	2 912	2 415	1 959	1 766
1 300	6 065	5 440	5 195	4 834	4 247	4 018	3 961	3 406	3 155	2 617	2 122	1 913
1 400	6 531	5 859	5 595	5 206	4 574	4 327	4 266	3 668	3 397	2 818	2 286	2 060
1 500	6 998	6 277	5 995	5 578	4 901	4 636	4 571	3 930	3 640	3 019	2 449	2 207
1 600	7 465	6 696	6 394	5 949	5 227	4 945	4 875	4 192	3 883	3 220	2 612	2 355
1 700	7 931	7 114	6 794	6 321	5 554	5 254	5 180	4 454	4 125	3 422	2 775	2 502
1 800	8 398	7 533	7 194	6 693	5 881	5 563	5 485	4 716	4 368	3 623	2 939	2 649
1 900	8 864	7 951	7 593	7 065	6 207	5 873	5 790	4 978	4 611	3 824	3 102	2 796
2 000	9 331	8 370	7 993	7 437	6 534	6 182	6 094	5 240	4 853	4 026	3 265	2 943
2 100	9 797	8 788	8 393	7 809	6 861	6 491	6 399	5 502	5 096	4 227	3 428	3 090
2 200	10 264	9 207	8 792	8 181	7 187	6 800	6 704	5 764	5 339	4 428	3 592	3 238
2 300	10 730	9 625	9 192	8 552	7 514	7 109	7 009	6 026	5 581	4 629	3 755	3 385
2 400	11 197	10 044	9 592	8 924	7 841	7 418	7 313	6 288	5 824	4 831	3 918	3 532
2 500	11 663	10 462	9 991	9 296	8 168	7 727	7 618	6 550	6 067	5 032	4 081	3 679
2 600	12 130	10 881	10 391	9 668	8 494	8 036	7 923	6 812	6 309	5 233	4 245	3 826
2 700	12 596	11 299	10 791	10 040	8 821	8 345	8 227	7 074	6 552	5 434	4 408	3 973
2 800	13 063	11 718	11 190	10 412	9 148	8 654	8 532	7 336	6 795	5 636	4 571	4 121
2 900	13 530	12 136	11 590	10 783	9 474	8 963	8 837	7 598	7 037	5 837	4 735	4 268
3 000	13 996	12 554	11 990	11 155	9 801	9 272	9 142	7 860	7 280	6 038	4 898	4 415

RADIATORS WITH FLAT FRONT PANEL (TYPE PLAN)

TYPE 10 PLAN

H [mm]	M_T^K [kg.m^{-1}]	M_T^{VK} [kg.m^{-1}]	V_T [dm^3.m^{-1}]	n	Φ_n [W.m^{-1}] pre t_1/t_2 ; t_r = 20°C			
					90/70	75/65	70/55	55/45
300	9,38	9,59	1,81	1,2937	376	297	241	153
400	12,10	12,34	2,24	1,2849	484	383	311	199
500	14,98	15,25	2,67	1,2753	584	463	376	241
550	16,55	-	2,80	1,2948	637	503	408	260
600	17,78	18,08	3,10	1,2660	675	536	436	281
900	26,20	26,58	4,30	1,3092	915	781	583	369

TYPE 11 PLAN

H [mm]	M_T^K [kg.m^{-1}]	M_T^{VK} [kg.m^{-1}]	V_T [dm^3.m^{-1}]	n	Φ_n [W.m^{-1}] pre t_1/t_2 ; t_r = 20°C			
					90/70	75/65	70/55	55/45
300	13,22	13,44	1,81	1,3131	638	502	406	257
400	17,20	17,44	2,24	1,3090	815	642	519	329
500	21,43	21,70	2,67	1,3049	977	770	623	395
550	-	-	-	-	-	-	-	-
600	25,20	25,50	3,10	1,3008	1 121	884	716	455
900	37,34	37,72	4,30	1,2961	1 521	1 201	973	619

TYPE 20W PLAN (width = 100 mm)

H [mm]	M_T^K [kg.m^{-1}]	M_T^{VK} [kg.m^{-1}]	V_T [dm^3.m^{-1}]	n	Φ_n [W.m^{-1}] pre t_1/t_2 ; t_r = 20°C			
					90/70	75/65	70/55	55/45
300	16,68	16,88	3,50	1,3088	713	562	454	288
400	21,20	21,44	4,37	1,3033	912	719	582	369
500	25,68	25,95	5,23	1,2977	1 093	863	699	445
550	28,40	-	5,30	1,2909	1 179	932	756	482
600	30,70	31,01	6,10	1,2918	1 262	997	808	515
900	45,42	45,83	8,70	1,2659	1 685	1 338	1 089	701

TYPE 20 PLAN (width = 65 mm)

H [mm]	M_T^K [kg.m^{-1}]	M_T^{VK} [kg.m^{-1}]	V_T [dm^3.m^{-1}]	n	Φ_n [W.m^{-1}] pre t_1/t_2 ; t_r = 20°C			
					90/70	75/65	70/55	55/45
300	16,68	16,88	3,50	1,3116	677	533	431	273
400	21,20	21,44	4,37	1,3060	864	681	551	349
500	25,68	25,95	5,23	1,3003	1 039	820	664	422
550	28,40	-	5,30	1,2981	1 128	890	721	459
600	30,70	31,01	6,10	1,2944	1 200	948	768	489
900	45,42	45,83	8,70	1,2681	1 621	1 286	1 046	673

TYPE 21 PLAN

H [mm]	M_T^K [kg.m^{-1}]	M_T^{VK} [kg.m^{-1}]	V_T [dm^3.m^{-1}]	n	Φ_n [W.m^{-1}] pre t_1/t_2 ; t_r = 20°C			
					90/70	75/65	70/55	55/45
300	17,59	17,79	3,50	1,3499	881	689	553	346
400	22,96	23,20	4,37	1,3586	1 102	860	690	430
500	28,36	28,63	5,23	1,3672	1 315	1 025	821	510
550	31,85	-	5,30	1,3640	1 424	1 111	890	553
600	33,75	34,06	6,10	1,3759	1 520	1 183	946	586
900	50,47	50,88	8,70	1,3686	2 098	1 635	1 309	813

TYPE 22 PLAN

H [mm]	M_T^K [kg.m^{-1}]	M_T^{VK} [kg.m^{-1}]	V_T [dm^3.m^{-1}]	n	Φ_n [W.m^{-1}] pre t_1/t_2 ; t_r = 20°C			
					90/70	75/65	70/55	55/45
300	19,76	19,95	3,50	1,3036	1 172	924	748	475
400	26,49	26,72	4,37	1,3121	1 479	1 164	940	595
500	31,98	32,23	5,23	1,3207	1 771	1 392	1 123	709
550	36,05	-	5,30	1,3290	1 926	1 512	1 218	767
600	38,00	38,28	6,10	1,3292	2 054	1 612	1 299	817
900	56,17	56,56	8,70	1,3321	2 853	2 238	1 802	1 133

TYPE 30 PLAN

H [mm]	M_T^K [kg.m^{-1}]	M_T^{VK} [kg.m^{-1}]	V_T [dm^3.m^{-1}]	n	Φ_n [W.m^{-1}] pre t_1/t_2 ; t_r = 20°C			
					90/70	75/65	70/55	55/45
300	24,23	24,42	5,20	1,2727	962	763	620	398
400	30,89	31,11	6,53	1,2866	1 216	962	780	499
500	37,55	37,80	7,87	1,3007	1 469	1 159	938	596
550	40,80	-	8,15	1,3029	1 603	1 264	1 023	650
600	44,21	44,50	9,20	1,3147	1 719	1 353	1 093	691
900	64,22	64,60	13,00	1,3279	2 468	1 937	1 561	983

TYPE 33 PLAN

H [mm]	M_T^K [kg.m^{-1}]	M_T^{VK} [kg.m^{-1}]	V_T [dm^3.m^{-1}]	n	Φ_n [W.m^{-1}] pre t_1/t_2 ; t_r = 20°C			
					90/70	75/65	70/55	55/45
300	27,94	26,13	5,20	1,3065	1 752	1 381	1 117	709
400	37,47	37,69	6,53	1,3222	2 197	1 726	1 392	878
500	45,07	45,33	7,87	1,3381	2 613	2 047	1 647	1 033
550	50,90	-	8,15	1,3446	2 826	2 212	1 778	1 113
600	53,97	54,25	9,20	1,3538	3 007	2 349	1 885	1 176
900	81,25	81,63	13,00	1,3708	4 059	3 161	2 530	1 569

RADIATORS FOR ROOMS WITH INCREASED HYGIENIC STANDARDS

TYPE 20W K, VK, VKS (width = 100 mm)

H [mm]	M_T^K [kg.m^{-1}]	M_T^{VK} [kg.m^{-1}]	V_T [dm^3.m^{-1}]	n	Φ_n [W.m^{-1}] pre t_1/t_2 ; t_r = 20°C			
					90/70	75/65	70/55	55/45
300	14,06	14,25	3,50	1,2897	774	612	496	317
400	17,70	17,94	4,37	1,2953	974	769	623	397
500	21,30	21,57	5,23	1,3010	1 166	920	745	473
550	23,55	-	5,30	1,3037	1 262	995	805	511
600	25,45	25,76	6,10	1,3066	1 355	1 068	864	548
900	37,54	37,95	8,70	1,3162	1 907	1 500	1 211	766

LEGEND

H	[mm]	- radiator height
M_T^K	[kg.m^{-1}]	- Kompakt radiator body weight
M_T^{VK}	[kg.m^{-1}]	- Ventil Kompakt radiator body weight
V_T	[dm^3.m^{-1}]	- water volume of radiator body
n	[-]	- temperature exponent of radiators
Φ_n	[W.m^{-1}]	- normalized heat output
t_1	[°C]	- input temperature of heating medium
t_2	[°C]	- output temperature of heating medium
t_r	[°C]	- at reference ambient air temperature (t_r = 20 °C)

CONVERSION FACTORS "f" FOR OTHER OPERATING CONDITIONS

t_1 [°C]	t_2 [°C]	Ambient air temperature t_r [°C]							n = 1,3331
		10	12	15	18	20	22	24	
110	90	0,4568	0,4707	0,4929	0,5171	0,5344	0,5528	0,5722	EN 442:
110	80	0,4929	0,5088	0,5344	0,5624	0,5824	0,6038	0,6266	t_1 [°C] = 75
105	90	0,4742	0,4891	6,5129	0,5389	0,5575	0,5773	0,5983	t_2 [°C] = 65
105	80	0,5129	0,5300	0,5575	0,5877	0,6094	0,6325	0,6573	t_r [°C] = 20
105	70	0,5575	0,5773	0,6094	0,6447	0,6703	0,6977	0,7271	
100	90	0,4929	0,5088	0,5344	0,5624	0,5824	0,6038	0,6266	
100	80	0,5344	0,5528	0,5824	0,6150	0,6386	0,6637	0,6907	
100	70	0,5824	0,6038	0,6386	0,6770	0,7049	0,7348	0,7671	
95	80	0,5824	0,6038	0,6386	0,6770	0,7049	0,7348	0,7671	
95	70	0,6094	0,6325	0,6703	0,7122	0,7427	0,7756	0,8112	
95	60	0,6703	0,6977	0,7427	0,7930	0,8300	0,8701	0,9138	
90	80	0,5824	0,6038	0,6386	0,6770	0,7049	0,7348	0,7671	
90	75	0,6094	0,6325	0,6703	0,7122	0,7427	0,7756	0,8112	
90	70	0,6386	0,6637	0,7049	0,7507	0,7842	0,8205	0,8598	
90	65	0,6703	0,6977	0,7427	0,7930	0,8300	0,8701	0,9138	
90	60	0,7049	0,7348	0,7842	0,8397	0,8807	0,9253	0,9739	
90	55	0,7427	0,7756	0,8300	0,8915	0,9370	0,9868	1,0414	
90	50	0,7842	0,8205	0,8807	0,9491	1,0000	1,0559	1,1176	
85	75	0,6386	0,6637	0,7049	0,7507	0,7842	0,8205	0,8598	
85	70	0,6703	0,6977	0,7427	0,7930	0,8300	0,8701	0,9138	
85	65	0,7049	0,7348	0,7842	0,8397	0,8807	0,9253	0,9739	
85	60	0,7427	0,7756	0,8300	0,8915	0,9370	0,9868	1,0414	
85	55	0,7842	0,8205	0,8807	0,9491	1,0000	1,0559	1,1176	
85	50	0,8300	0,8701	0,9370	1,0135	1,0708	1,1340	1,2040	
80	70	0,7049	0,7348	0,7842	0,8397	0,8807	0,9253	0,9739	
80	65	0,7427	0,7756	0,8300	0,8915	0,9370	0,9868	1,0414	
80	60	0,7842	0,8205	0,8807	0,9491	1,0000	1,0559	1,1176	
80	55	0,8300	0,8701	0,9370	1,0135	1,0708	1,1340	1,2040	
80	50	0,8807	0,9253	1,0000	1,0860	1,1508	1,2227	1,3029	
75	65	0,7842	0,8205	0,8807	0,9491	1,0000	1,0559	1,1176	
75	60	0,8300	0,8701	0,9370	1,0135	1,0708	1,1340	1,2040	
75	55	0,8807	0,9253	1,0000	1,0860	1,1508	1,2227	1,3029	
75	50	0,9370	0,9868	1,0708	1,1681	1,2419	1,3243	1,4168	
70	60	0,8807	0,9253	1,0000	1,0860	1,1508	1,2227	1,3029	
70	55	0,9370	0,9868	1,0708	1,1681	1,2419	1,3243	1,4168	
70	50	1,0000	1,0559	1,1508	1,2617	1,3465	1,4417	1,5495	
70	45	1,0708	1,1340	1,2419	1,3692	1,4674	1,5787	1,7055	
70	40	1,1508	1,2227	1,3465	1,4939	1,6088	1,7401	1,8913	
65	55	1,0000	1,0559	1,1508	1,2617	1,3465	1,4417	1,5495	
65	50	1,0708	1,1340	1,2419	1,3692	1,4674	1,5787	1,7055	
65	45	1,1508	1,2227	1,3465	1,4939	1,6088	1,7401	1,8913	
65	40	1,2419	1,3243	1,4674	1,6399	1,7758	1,9328	2,1156	
60	55	1,0708	1,1340	1,2419	1,3692	1,4874	1,5787	1,7055	
60	50	1,1508	1,2227	1,3465	1,4939	1,6088	1,7401	1,8913	
60	45	1,2419	1,3243	1,4674	1,6399	1,7758	1,9328	2,1156	
60	40	1,3465	1,4417	1,6088	1,8129	1,9758	2,1662	2,3911	
55	50	1,2419	1,3243	1,4674	1,6399	1,7758	1,9328	2,1156	
55	45	1,3465	1,4417	1,6088	1,8129	1,9758	2,1662	2,3911	
55	40	1,4674	1,5787	1,7758	2,0206	2,2188	2,4538	2,7361	
55	35	1,6088	1,7401	1,9758	2,2738	2,5194	2,8156	3,1787	
55	30	1,7758	1,9328	2,2188	2,5882	2,8994	3,2824	3,7638	
45	40	1,7758	1,9328	2,2188	2,5882	2,8994	3,2824	3,7638	
45	35	1,9758	2,1662	2,5194	2,9875	3,3923	3,9039	4,5676	
45	30	2,2188	2,4538	2,8994	3,5087	4,0532	4,7650	5,7286	
40	35	2,2188	2,4538	2,8994	3,5087	4,0532	4,7650	5,7286	
40	30	2,5194	2,8156	3,3923	4,2129	4,9779	6,0242	7,5269	
40	25	2,8994	3,2824	4,0532	5,2081	6,3476	8,0085	10,6142	

Example of valve pre-setting calculation is on the page 26.

CHARACTERISTICS OF THE KORAD VK TYPE RADIATORS - VALVE PRE-SETTING CALCULATION

page 9

EXAMPLE

Adjust the valve pre-setting for KORAD radiator - type 21;
height = 600 mm, length = 1 000 mm in system with projected decrease of water temperature 90 / 70 °C and pressure drop of 3 kPa.
Given parameters:

- heat output $\Phi = 2\,165$ W
- drop in water temperature $\Delta t = 20$ K [90/70°C]
- pressure drop $\Delta p = 3$ kPa
- specific heat of water $C = 4186\ m^2 \cdot s^{-2} \cdot K^{-1}$
- mass flow rate $M_W\ [kg \cdot h^{-1}]$

SOLUTION

$$M_W = \frac{\Phi}{C \cdot \Delta t} = \frac{2165}{4186 \cdot 20} \cdot 3600 \cong 93\ [kg \cdot h^{-1}]$$

The valve insert Heimeier 4360 in addition to eight basic positions enables also fine adjustment of intermediate positions. This insert is fitted as a standard to the KORAD Ventil Kompakt radiators as part of delivery.

DIAGRAM Δp - M_W - k_V

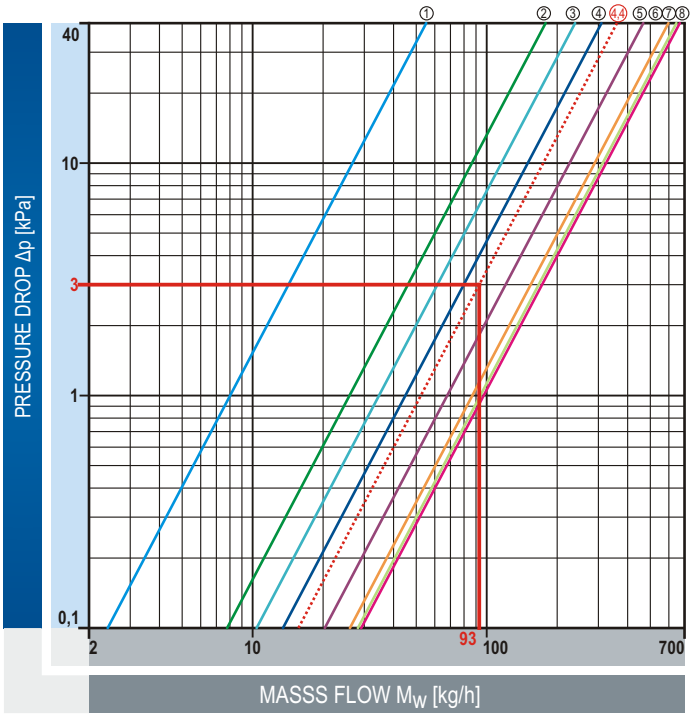

On the above diagram Δp - M_W - k_V draw intersection of mass flow value and pressure drop, then draw a parallel line with slant lines through the intersection. Read out the required valve pre-setting is : **4,4**.

RADIATOR PERFORMANCE CONVERSION TO OTHER OPERATING CONDITIONS

page 25

CALCULATION PROCEDURE

Heat outputs of radiators are applicable to basic operating conditions according to EN 442:

- input water temperature $t_1 = 75$ °C
- output water temperature $t_2 = 65$ °C
- reference air temperature $t_r = 20$ °C

For other operating conditions the conversion of heat outputs must be performed according to following equation: $\Phi = \Phi_c . f$

where: Φ [W] - calculated heat output of heating body at operating conditions according to EN 442.

Φ_c [W] - calculated heat output (heat loss) of heating body at other operating conditions than those specified by EN 442

f - a conversion factor for other operating conditions under the table

Find suitable radiator in tables of heat output Φ (pages 12 - 24) for operating conditions of 76/65/20 °C.

EXAMPLE

Design a suitable KORAD heating body into a room with an ambient air temperature of 18 °C and with a heating system operated with a temperature gradient of 70/40 °C:

- input water temperature $t_1 = 70$ °C
- output water temperature $t_2 = 40$ °C
- reference air temperature $t_r = 18$ °C

The heat loss calculated for the basic operating conditions according to EN442 standard for 75/65/20 °C is 1 137 W.

SOLUTION

For the operating conditions of 70/40/18 °C, the table states following conversion factor f = 1.4939.

Calculation: $\Phi = 1137 \times 1{,}4939 = 1\,699$ W

Find the most suitable heating body in tables on pages 12 -24 (operating conditions 75/65/20 °C) with heat output Φ closest to the value calculated above.. The catalog of KORAD panel radiators offers following radiators:

Type 11K, 11VK, VKS	600 x 1800	1 728 W
Type 20K, 20VK, VKS	600 x 1600	1 632 W
Type 21K, 21VK, VKS	600 x 1300	1 673 W
Type 22K, 22VK, VKS	600 x 1000	1 698 W
Type 33K, 33VK, VKS	600 x 700	1 687 W

For practical reasons, the search was limited to heating bodies with height of H = 600 mm.

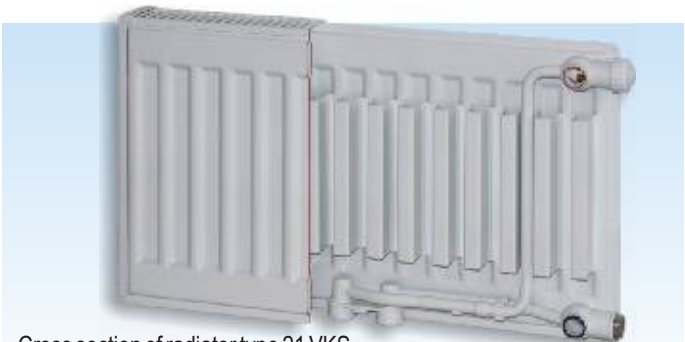

Cross section of radiator type 21 VKS.

LABELING OF PANEL RADIATORS

Each KORAD radiator is tagged with with a bar code lable indicating the date of production, the operating pressure and the type of radiator. Furthermore, a paper sheet with type, size and with warranty conditions is inserted under the protective foil.

Each radiator bears an alphanumeric code (see below):

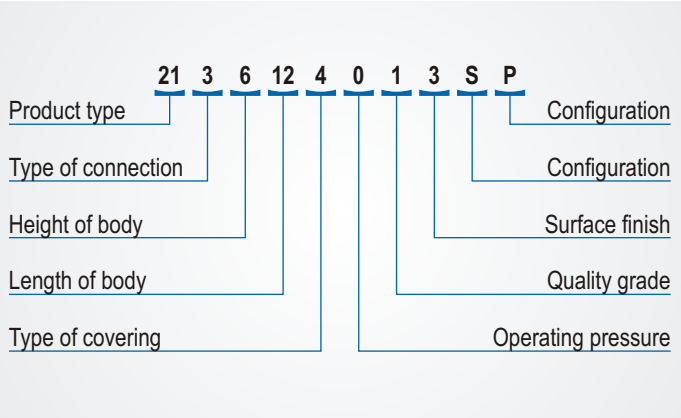

EXAMPLE OF A COMMERIAL ORDER

2136124013SP - panel radiator type 21 VKS (Ventil Kompakt, central connection with a valve insert on the right side), height of 600 mm, length of 1200 mm, with flat front panel.

2246122013 - panel radiator 22K (Kompakt), height of 600 mm, length of 1200 mm.

RADIATOR CODEBOOK

No.	Description	Designation
1. + 2.	Type of product	1st position: number of panels
		2nd position: number of convectors
3.	Type of connection	4 - type K
		3 - type VKP (right)
		5 - type VKL (left)
		6 - type VK without hang tabs
		8 - type K without hang tabs
4.	Height	3 - 300 mm
		4 - 400 mm
		5 - 500 mm
		1 - 550 mm
		6 - 600 mm
		9 - 900 mm
5. + 6.	Length	04 - 30 - (400 - 3000 mm) e.g.12 = length 1200 mm
7.	Type of covering	0 - without covers
		2 - with covers
		4 - with covers (narrow type 20, 21)
8.	Operating pressure	0 - 1 MPa
		6 - 0,6 MPa
9.	Quality grade	1 - class I
		2 - class II
10.	Paint	3 - RAL 9010
		0 - black
		2 - primer
		8 - other RAL
Additional data (referred to as appropriate)		
11.	Configuration	S - middle connection
		U - narrow (type 20, 21 = 65mm)
		G - shifted hang tabs
		0 - auxiliary character
12.	Configuration	P - flat front panel

NOTES

Steel that warms

U. S. Steel Košice, s.r.o.
Vstupný areál U. S. Steel
044 54 Košice
Slovak Republic

tel.: + 421 55 673 45 24
+ 421 55 673 62 80
+ 421 55 673 46 69
fax: + 421 55 673 79 10

Issued: March 2011